UNLESS OTHERWISE SPECIFIED:
DIMENSIONS ARE IN MILLIMETERS
TOLERANCES:
FRACTIONAL +/- 1/100
ANGULAR: MACH +/- 0.5° BEND+/- 1°
ONE PLACE DECIMAL +/- 1.3 or 0.05"
TWO PLACE DECIMAL +/- 0.13 or 0.005"
INTERPRET GEOMETRIC TOLERANCING PER:
ASME Y14.5

Item #	Description	Quantity	Drawing Number
1	Air Prep	1	PN-001 (#5)
2	Air Manifold (6 Port)	1	PN-003 (#6)
3	Vacuum Generator	1	PN-004 (#7)
4	Docking Actuators	4	PN-006 (#8)
5	Double Sheet Sensor	1	DSS-001 (#9)
6	Quick Reference	1	QR-001 (#10)
7	Material Cart	1	MC-001 (#11)
8	UR20 Mount	1	RM-001 (#12)
9	Gaylord Cart	1	N/A
10	EasyCtrl	1	Refer to Elec. Dwg
11	UR Standard Control Box	1	Refer to Elec. Dwg
12	Operator Console	1	

REVISIONS			
REV.	DESCRIPTION	DATE	APPROVED

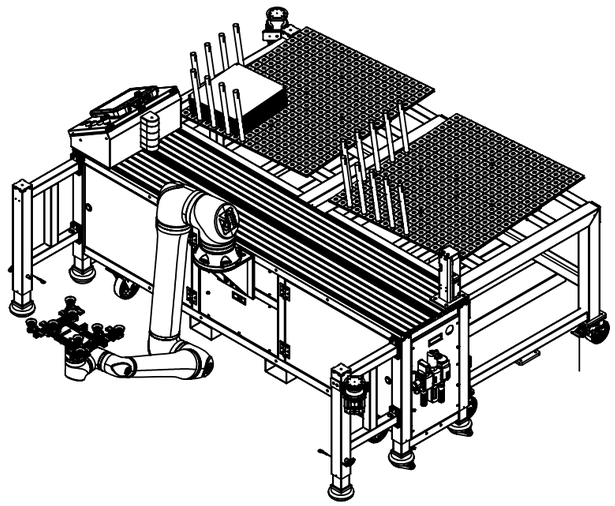

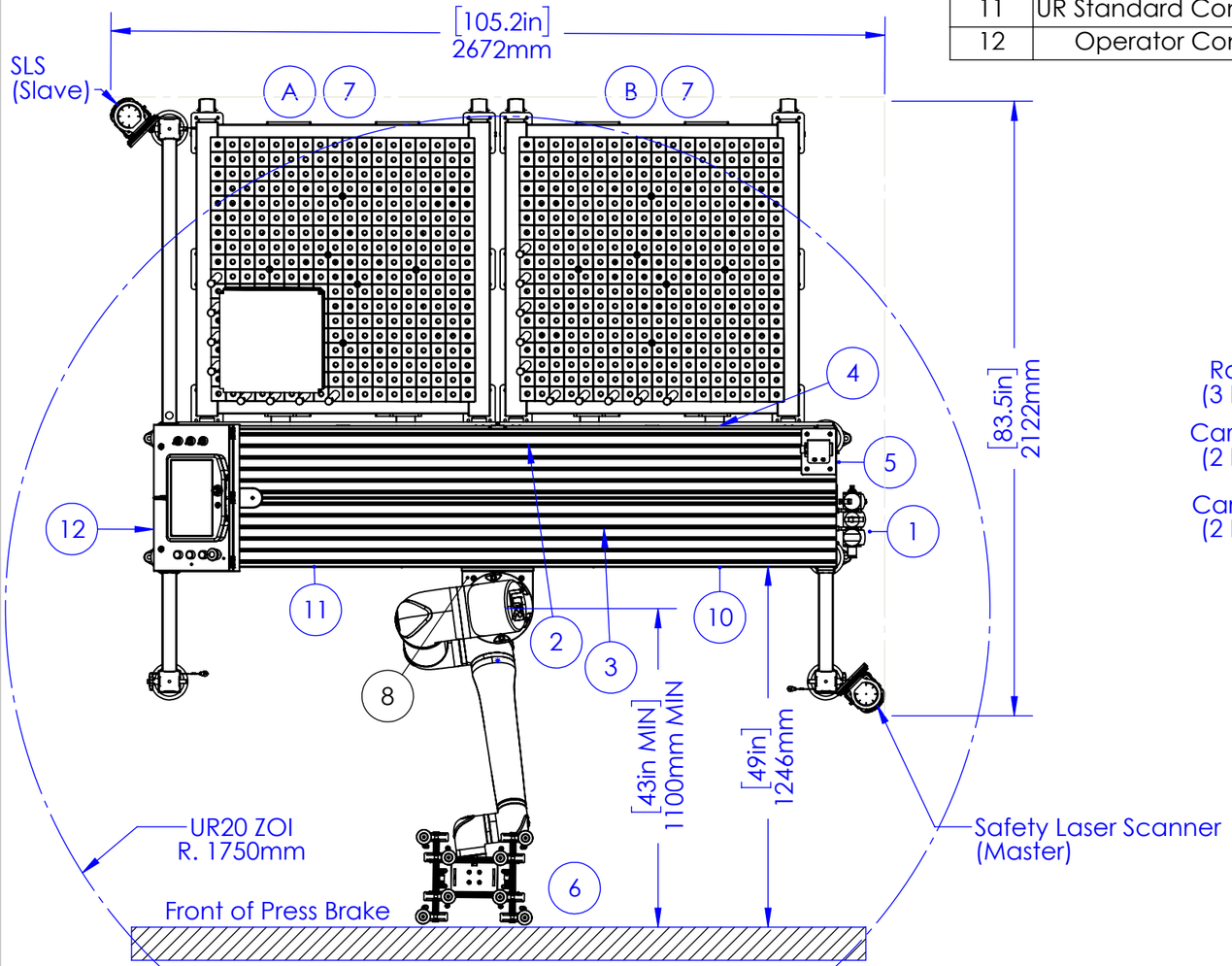

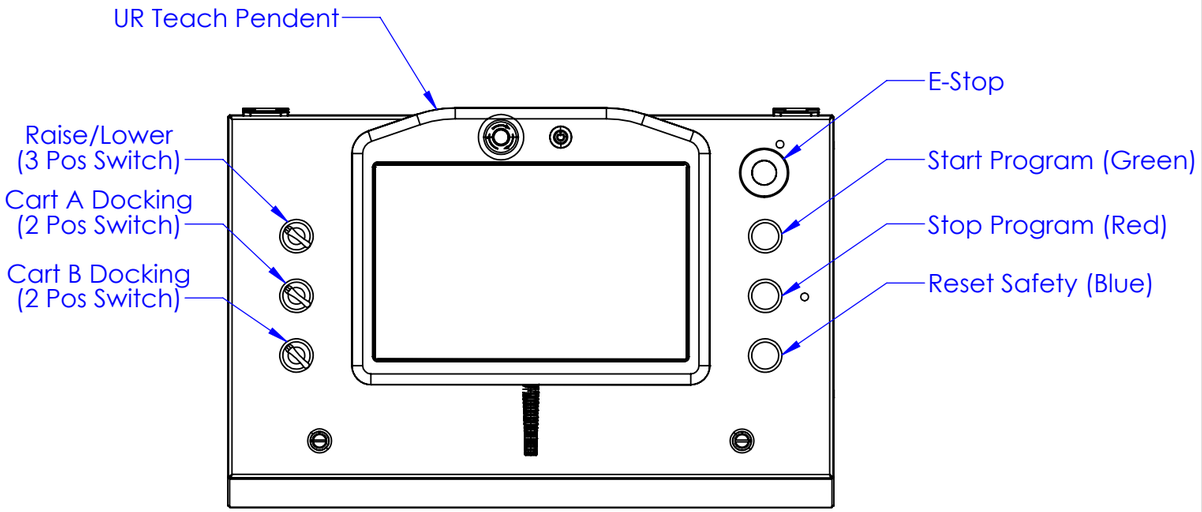

OPERATOR CONSOLE

PROPRIETARY AND CONFIDENTIAL

THE INFORMATION CONTAINED IN THIS DRAWING IS THE SOLE PROPERTY OF MECHATRONIC SYSTEMS. ANY REPRODUCTION IN PART OR AS A WHOLE WITHOUT THE WRITTEN PERMISSION OF MECHTRONIC SYSTEMS IS PROHIBITED.

	INITIALS	DATE
DRAWN	ND	02/22/2024
CHECKED	TK	02/22/2024

MATERIAL: N/A
FINISH: N/A
DO NOT SCALE DRAWING

MECHATRONIC SYSTEMS
5220 EAST 64TH STREET
INDIANAPOLIS, IN 46220
833-293-1010

TITLE:
ETPB - Footprint
Operator Console Layout

Part #:

SIZE	DWG. NO.	REV
B	C-001	0

SCALE: 1:20	WEIGHT:	SHEET 1 OF 12