AFD62

Adjustable Force Device



Manual

PUSHCORP

HANDLE WITH CARE
DO NOT DROP

DO NOT USE LUBRICATED AIR.

This device requires a dry, non-lubricated 80 psi (5.5 bar) maximum air supply filtered to 5 µm and a 0.3 micron oil mist separator.

Non-compliance with these requirements will void the manufacturer's warranty. (See Section 3.4)

All fasteners, mounting holes, and pipe threads on this tool are METRIC

All *PushCorp, Inc.* electrical cables are rated for high twist and flex robotic applications with a minimum cable bending radius specification of 125mm (5 in). Cable damage resulting from failure to abide by this specification will not be covered under warranty.

TABLE OF CONTENTS

1.0 Limited Warranty 1
2.0 General Overview 3
3.0 Installation 4
3.1 Mounting Process Equipment 4
3.2 Mounting the *AFD62* 6
3.2.1 Mounting the AFD60-1 Vertical and AFD60-2 Horizontal 6
3.3 Maximum Carriage Load Calculations 9
3.4 Pneumatic Connection 11
4.0 Electrical Connections 13
4.1 Carriage Position Feedback Connection 13
5.0 Achieving Desired Force 16
6.0 Technical Specifications 18
7.0 Preventative Maintenance Schedule 19

1.0 LIMITED WARRANTY

Duration:

One year from date of delivery to the original purchaser.

Who gives this warranty:

PushCorp
Telephone: (972) 840-0208

Corporate Address:
P. O. Box 181915
Dallas, Texas 75218

Shipping Address:
3001 W. Kingsley Rd.
Garland, Texas 75041

Who gives this warranty (purchaser):

The original purchaser (other than for purposes of resale) of the *PushCorp* product

What products are covered by this warranty:

Any *PushCorp* industrial equipment or accessory supplied of manufactured by the Warrantor.

What is covered under this warranty:

Defects in material and/or workmanship which occur within the duration of the warranty period

What is not covered in this warranty:

A. IMPLIED WARRANTIES, INCLUDING THOSE OF MERCHANT-ABILITY AND FITNESS FOR A PARTICULAR PURPOSE ARE LIMITED TO ONE YEAR FROM THE DATE OF ORIGINAL PURCHASE. Some states do not allow limitations on how long an implied warranty lasts, so the above limitations may not apply to you.

B. ANY INCIDENTAL, INDIRECT, OR CONSEQUENTIAL LOSS, DAMAGE or EXPENSE THAT MAY RESULT FROM ANY DEFECT, FAILURE, MALFUNCTION OF THE *PUSHCORP, INC.* PRODUCT. Some states do not allow the exclusion or limitation of incidental or consequential damages so the above limitation or exclusion may not apply to you.

C. Any failure that results from an accident, purchaser's abuse, neglect, unauthorized repair or failure to operate the products in accordance with the instructions provided in the owner's manual(s) supplied with the product.

Responsibilities of the Warrantor under this warranty:

Repair or replace, at Warrantor's option, products or components which have failed within the duration of the warranty period.

Responsibilities of the purchaser under this warranty:

A. Deliver or ship the *PushCorp, Inc.* product or component to PushCorp, Inc. Service Center, Dallas, TX. Freight and insurance costs, if any, must be borne by the purchaser.

B. Use reasonable care in the operation and maintenance of the product as described in the owner's manual(s).

When warrantor will perform repair or replacement under this warranty:

Repair or replacement will be scheduled and serviced according to the normal work flow at the service center, and depending on the availability of replacement parts. Purchasers requiring quicker repair may receive such with payment of a *PushCorp, Inc.* predetermined expediting fee.

This Limited Warranty gives you specific legal rights and you may also have other rights which vary from state to state.

2.0 GENERAL OVERVIEW

The *PushCorp, 62 Series* AFD was designed to be a small, light weight passive compliance device. It fits into the Passive lineup between AFD52 & AFD72. As such, the *62 Series* is a great fit for small to medium size robots. To reduce operating friction and increase force accuracy the *62 Series* uses glass pneumatic cylinders with graphite pistons, and linear guide rails. The *AFD62* incorporates an internal linear potentiometer that allows the monitoring of the carriage position during operation. It has two robot mounting configurations. The *AFD62* may be supplied to apply both positive and negative forces.

The *62 Series* requires the user to supply at least one pressure regulator to control the force output. The device's low friction components mean that the force output resolution and repeatability is highly dependent on the regulator accuracy. The regulator can be manual or electrically adjustable based on the user's application requirements. If only one force level is required and the AFD orientation does not change, a manual regulator is sufficient. If the force and/or AFD orientation changes during the process, then an electrically controlled proportional regulator is required. In some cases the process equipment weight must be taken into account so that a constant force can be applied regardless of the AFD orientation. This situation requires calculation of the regulator pressure based on the process equipment weight and AFD orientation. To monitor the Carriage position the *AFD62* must be connected to a DC power source and an analog input device through a PushCorp high-flex cable.

All these features combine to make the *PushCorp 62 Series* Adjustable Force Devices rugged, reliable devices capable of delivering consistent results in any number of industrial applications.

3.0 INSTALLATION

3.1 Mounting Process Equipment

The *AFD62* Adjustable Force Device is designed to accommodate the PushCorp SM1202 and RPS100. However, many end users also develop process equipment for their own proprietary applications. The AFD can be oriented parallel or perpendicular to the manipulator mounting flange, although it is important to note that the AFD can apply force only in the direction of the carriage's linear travel.

When mounting process equipment to the carriage, extreme care should be taken while designing and installing the brackets. Correctly designed brackets will increase the stiffness of the carriage by becoming an external superstructure for the carriage. The carriage can gain a tremendous amount of rigidity if this approach is executed correctly. Incorrectly designed brackets will deform the carriage causing internal linear rail misalignment. A symptom of carriage deformation is "slop" or "binding" of the Carriage. A deformed or loose Carriage will damage the Linear Rails and affect the consistency of your process. If the Carriage becomes loose or binds after installing the process equipment, then the brackets must be removed and the problem corrected. *PushCorp* can design and fabricate brackets to user supplied specifications as an option.

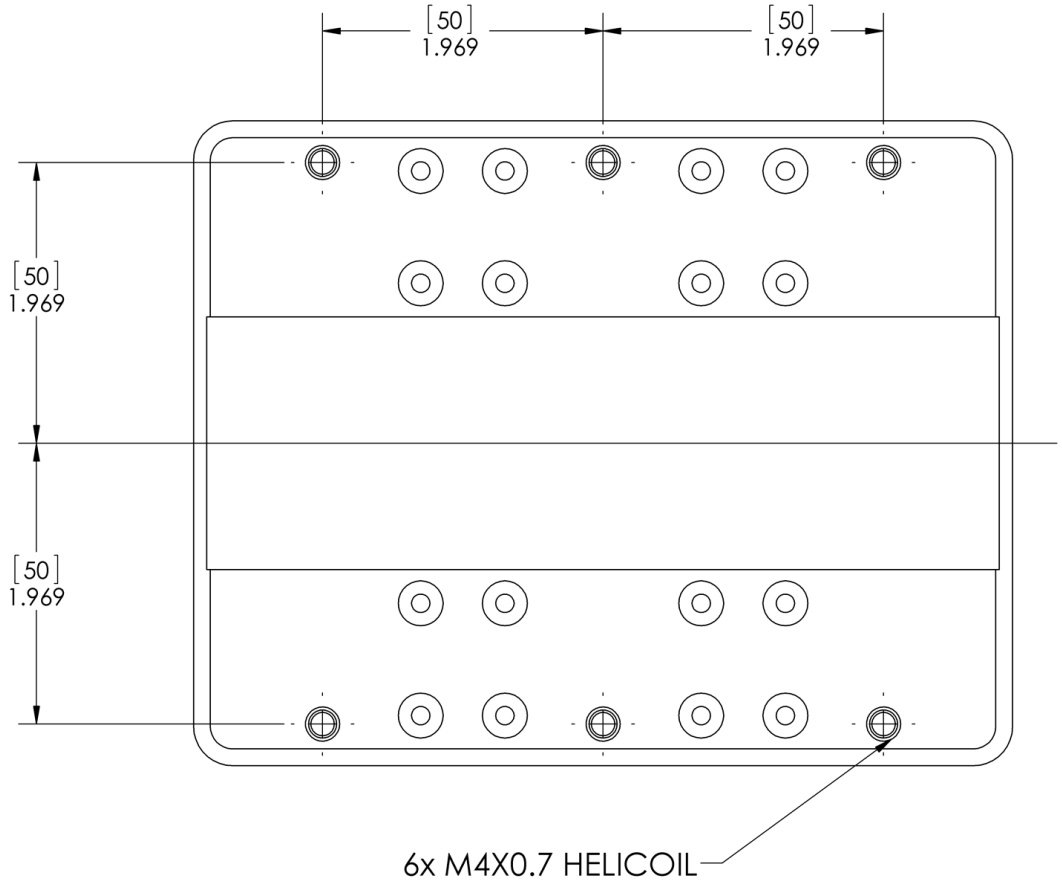

Figure 1: Carriage Bolt Hole Pattern

The bolt pattern on the Carriage has been designed to facilitate process equipment installation. The Carriage has (6) six M4x0.7 mounting holes with a depth of 0.26 inch (6.5 mm) to provide secure attachment points. The mounting holes are spaced 100mm across and on 50mm centers along the length of the Carriage. (See Figure 1)

Care must be taken when designing and manufacturing brackets that will be mounted to the linear carriage. It is essential that these brackets maintain a face to face parallelism of at least 0.001” in order to prevent binding, which can lead to inaccurate applied force. As a result, we recommend using tooling plate for the stock material, or blanchard grinding the mounting faces.

If those options are not practical for your design, machined steps or the use of shims under bolted surfaces are also suitable. We recommend a height of 0.02” to ensure enough clearance between the carriage and the mounting plate.

3.2 Mounting the *AFD62*

The basic configuration of the *AFD62* force device allows attachment to a stationary fixture or a robotic manipulator mounting flange. Specifying an AFD62 -1 or -2 determines how the Mounting Bracket is mounted to the AFD.

3.2.1 Mounting the AFD60-1 Vertical and AFD60-2 Horizontal

The *AFD62*-1 and *AFD62*-2 are supplied with a standard Mounting Bracket shown in Figure 2. All 4 mounting holes should be utilized to secure the Mounting Bracket to the robot mounting flange. If your robot flange does not feature an ISO 50 bolt pattern, then an adapter plate can be utilized. Your PushCorp Sales representative can help select the needed components.

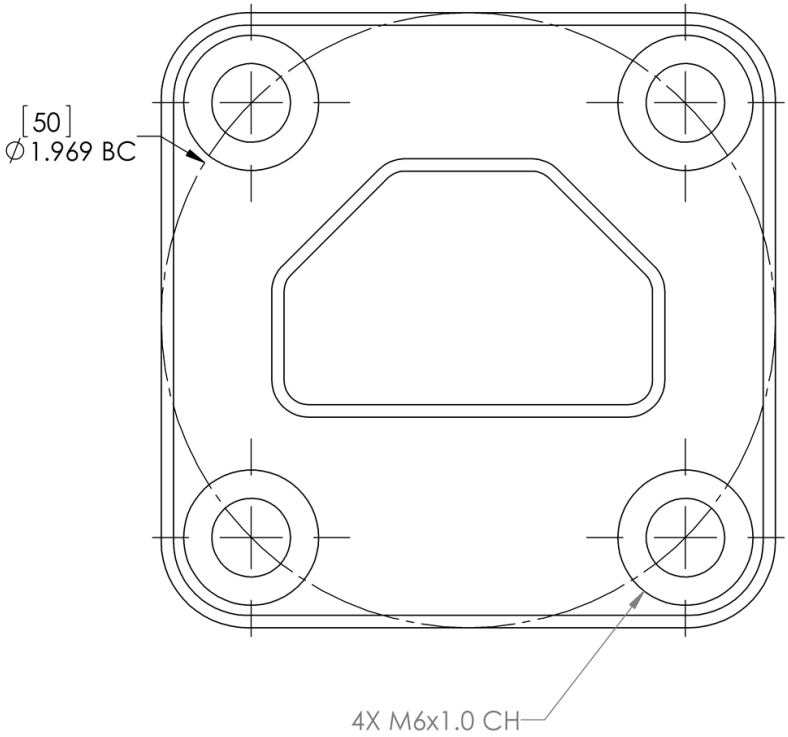

Figure 2: AFD62 Mounting Bracket

Depending on the application, a -1 or -2 mounting configuration can be specified at the time the order is placed. The AFD62-1 can be seen in Figure 3 and the AFD62-2 can be seen in Figure 4. The -1 configuration puts the linear compliant stroke inline with the robot arm, whereas the -2 configuration is perpendicular. Depending on the geometry of the part, the -1 or -2 may help access more features and allow for easier robot programming. If you have any questions regarding your specific process, please reach out to your sales representative.

Both the -1 and -2 are attached to the robot in the exact same manner. The AFD62 mounting bracket shown in Figure 3 & 4 is mounted to joint 6 of the robot first. Then, the -1 or -2 mounting flange is aligned and positioned into the mounting bracket such that the

THRU holes are aligned. At that point, the M8x1.25 shoulder bolt should be inserted and threaded into the AFD62 mounting bracket to tighten the assembly as shown in Figure 6. This bolt should be torqued to 40N-m (30ft-lbs).

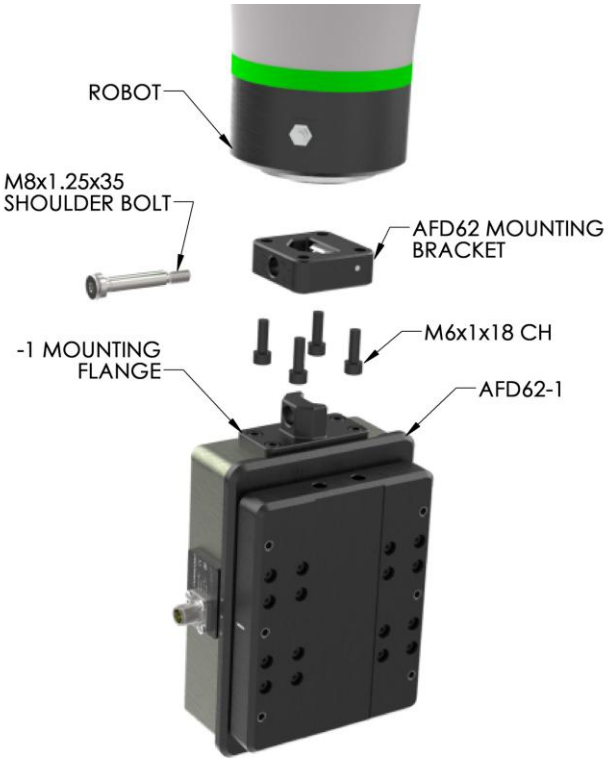

Figure 3: AFD62-1 Mounting

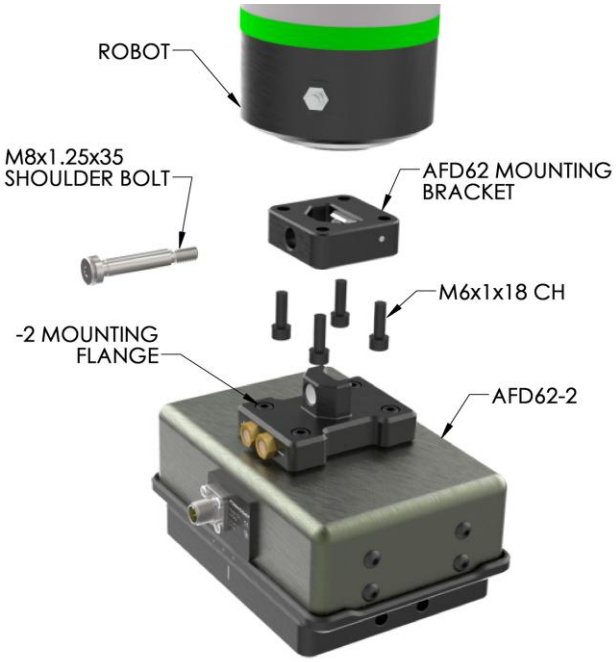

Figure 4: AFD62-2 Mounting

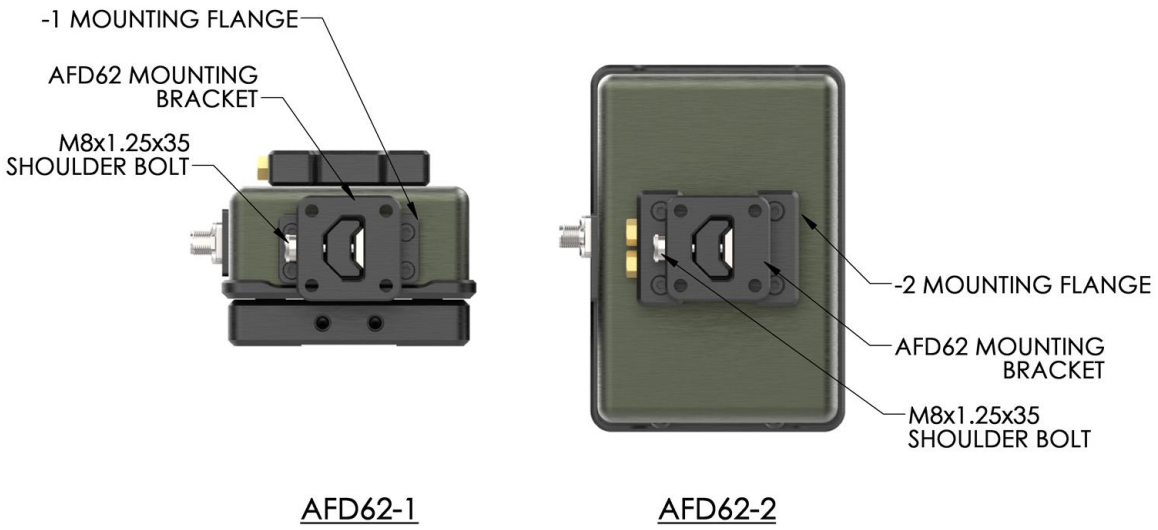

Figure 5: Joint 6 Mounting

3.3 Maximum Carriage Load Calculations

The Linear Rail bearings that support the *AFD62* Carriage have been selected to provide optimal performance with respect to capacity, size, and low friction. To ensure continued optimal performance it is very important not to overload these bearings. The following diagrams and associated equations are provided to check your application for excessive loading.

It is important to note that these equations **require** the use of Metric units. The necessary conversions are provided for your convenience. Insert your maximum applied force and process equipment weight (W) and Load Overhang Distances (D) to calculate an actual Bearing Load (L) that must be less than the maximum Bearing Load shown on the right side of the equation. The life of the bearings is 100,000 meters of linear motion, at the maximum allowable Bearing Load value. Exceeding this value (L) will reduce the life, and operating at less than this value (L) will increase the life. It is common to have combined weight and force loads on the Carriage. These situations will require adding two or more of the scenarios shown below. The sum of the different weight and force loads must be less than the Bearing Load (L). If the AFD62 is placed in multiple orientations, then the Bearing Load (L) should be checked for each one. If your application is not similar to any of the designs listed here, or if the information is not clear, please contact *PushCorp* Technical Support for assistance.

W = MAXIMUM APPLIED FORCE
D = LOAD OVERHANG (MM)
L = BEARING LOAD (N)
X = CONCENTRATED LOAD POSITION

1 lbf = 4.45 N
1 in = 25.4mm
1 N = 0.102 kg
FOS = 4

CASE 1

PROFILE RAIL BEARINGS:

$$L = W\ (0.25+\frac{D+73}{100}) < 1052.5$$

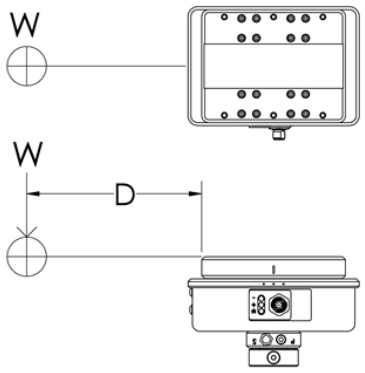

CASE 2

PROFILE RAIL BEARINGS:

$$L = \frac{W}{4} < 1052.5$$

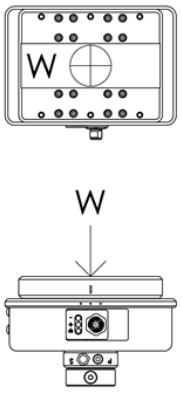

CASE 3

PROFILE RAIL BEARINGS:

$$L = W(\frac{D+17}{100}) < 1052.5$$

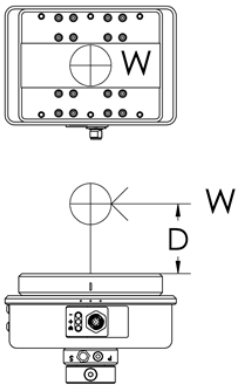

3.4 Pneumatic Connection

The *AFD62* Adjustable Force Devices require a dry, non-lubricated, 5 µm filtered, 90 psi (6.2 Bar) maximum air supply. Failure to provide supply air to these specifications can degrade performance and will void any warranty repairs concerning pneumatic components. Filtered air is required to prevent foreign material from entering the AFD.

The pneumatic supply system should be configured as shown in Figure 6.

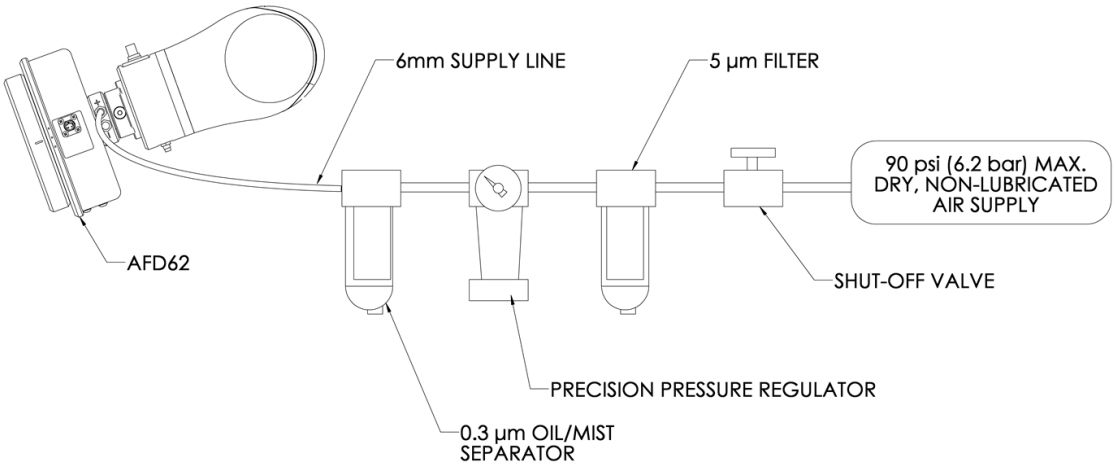

Figure 6: Pneumatic Connection

To apply force in the positive + direction, on an AFD62, a Supply Line must be connected to the + Supply Air Port. To apply force in the negative - direction, on an AFD62, a Supply Line must be connected to the - Supply Air Port.



Figure 7: AFD62 Air Connections

If water condensation is a problem in your air supply system, an air dryer device is highly recommended. The ideal solution is an industrial chiller dryer capable of reducing the dewpoint to less than 32□ F (0□C). Moisture inside the AFD will cause premature failure that will not be covered under warranty.

In applications where the environment contains suspended particulate matter, purge air flow must be used to ensure that the inside of the AFD remains clear of foreign matter. A

Purge Port on the *AFD62* (See Figure 7.) provides a pneumatic connection to supply this air flow. The port accepts a metric R 1/8 tapered pneumatic fitting. PushCorp can provide fittings for english or metric tubing. The input pressure to the purge port can range from 10 PSI to 60 PSI (0.7 – 4.1 bar) with a flow rate of 0.5 to 2.0 SCFM (14 – 56 l/min) depending on the application. The purge air must be dry and non-lubricated, however it need only be filtered to 20 microns.

The Supply Line and Purge Line to the device should be 1/4 inch or 6mm diameter flexible polyurethane tubing. The tubing should be routed to the AFD such that there are no kinks and that there is plenty of slack to allow for manipulator motion. Before inserting the Supply Line or Purge Line into the force device air fitting, open the Shut-off valve to blow out any contaminates which may be in the line. The tubing can now be pushed into the self-locking fitting located on the side of the AFD. Charge the Supply Line with compressed air and verify that there are no air leaks.
NOTE: PushCorp highly recommends the use of flexible polyurethane tubing as opposed to nylon tubing. This is because nylon tubing tends to crimp shut when it is bent. This severely limits air flow to the AFD.

To remove the Supply Line, first discharge all air pressure in the system, then while pushing inward on the fitting's plastic ring, simultaneously pull the tubing out. Cover or plug the self-locking fitting any time the Supply Line or Purge Line is not connected. This will keep contaminants from entering the AFD.

4.0 ELECTRICAL CONNECTIONS

4.1 Carriage Position Feedback Connection

The *AFD62* comes equipped with an internal potentiometer that provides a voltage signal based on the linear motion of the Carriage. The voltage signal is at a minimum when the Carriage is in the full negative position and a maximum when the Carriage is in a full positive position. A High-Flex Cable is used to connect the DC voltage supply, and analog signals to the force device. The connector is specially designed to minimize strain on the cable. The plug and socket is configured to make it impossible to connect them incorrectly.

The linear position signal must be calibrated for each installation. User calibration is easily accomplished using the following steps.

1. Attach the High-Flex Cable to the Carriage Position Feedback Connector as shown in Figure 8.
2. Attach a female M12 4 pin A-code connector to the other side.
3. Move the Carriage to the full negative position.
4. Read the voltage signal on the **POSN** *Position Signal* output. Record this voltage for future reference. This will be referred to as $V_{negative}$.
5. Move the Carriage to the full positive position.
6. Read the voltage signal on the **POSN** *Position Signal* output. Record this voltage for future reference. This will be referred as V_{pos}.
7. The position of the Carriage can now be determined by measuring the current voltage on the **POSN** *Position Signal* output (V_m) and inserting the value into the following equation:

$$p = 0.8in\ x\ \left(\frac{V_m - V_{negative}}{V_{pos} - V_{negative}}\right)(English\ Units)$$

$$p = 20mm\ x\ \left(\frac{V_m - V_{negative}}{V_{pos} - V_{negative}}\right)(Metric\ Units)$$

Where,

$$p = Carriage\ Position\ (in, mm)$$

$$V_m = Voltage\ measured\ on\ POSN\ signal\ wire\ (V)$$

$$V_{neg} = Calibrated\ voltage\ at\ fully\ negative\ Carriage\ position\ (V), (0\ inch, 0\ mm)$$

$$V_{pos} = Calibrated\ voltage\ at\ fully\ positive\ Carriage\ position\ (V), (0.8\ in, 20\ mm)$$

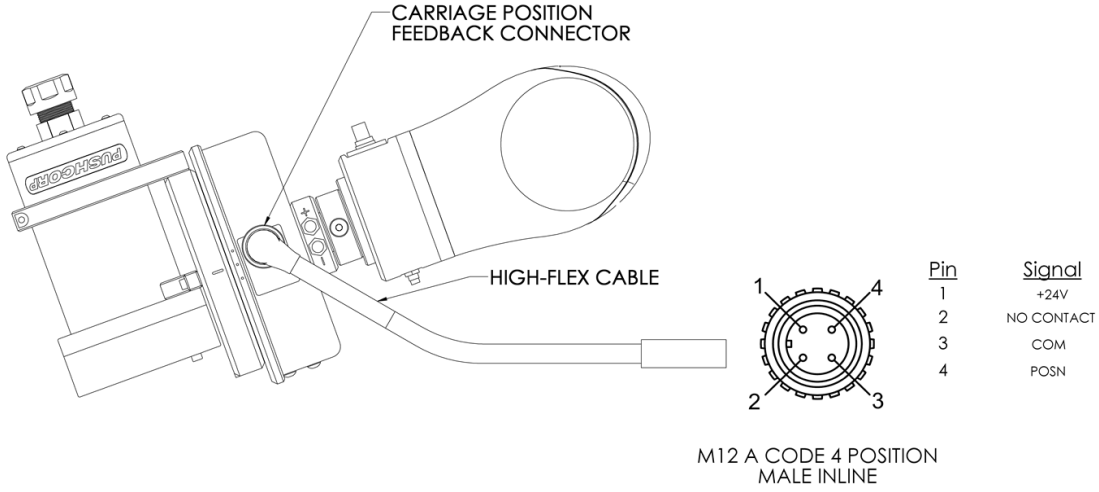

Figure 8: Electrical Connections

+V	*Supply Voltage* - The supply voltage input for the AFD82. The supply should be well regulated to +/- 10%. The load resistance is 2500 Ω ±30%. The supply voltage should not exceed 24VDC. A 12VDC supply will yield a POSN signal output voltage between 0 and 10 VDC. For a direct 24V supply, a 2100Ω resistor needs to be added in-line to divide the voltage down to the 0-10V operation range.
COM	*Supply Common* - The supply common input for the AFD82. It should be connected to the common terminal for the supply as well as the analog common for the position signal.
POSN	*Position Signal* - The linear potentiometer signal output. This voltage signal represents the Carriage position. The device connected to this output should have an input impedance of equal to or greater than 100kΩ. The linear potentiometer signal is not calibrated from the factory but is linear to ±1.0%.
SHLD	*Cable Shield* – The drain wire for the overall cable shield. Connect this wire to the central grounding point of the panel.

NOTE: Care should be taken to ensure that all signal and voltage source commons are connected together on the user end to avoid D.C. offset errors.

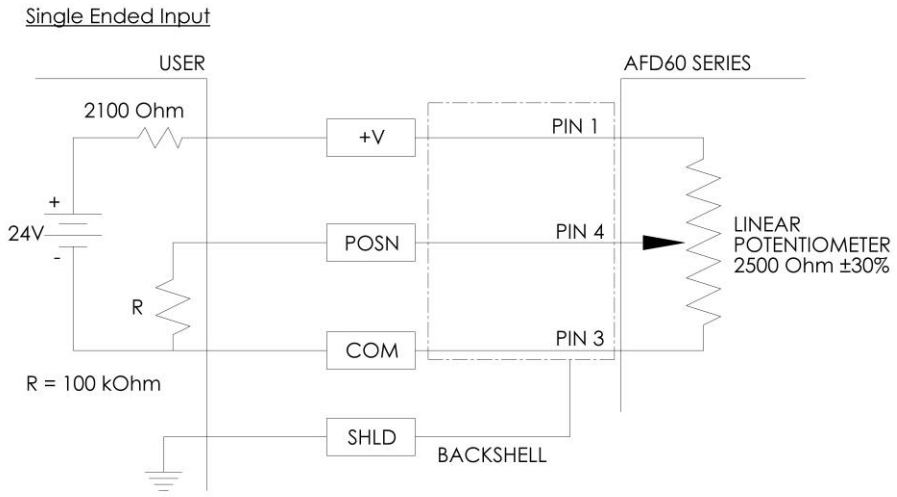

Figure 9: Linear Potentiometer 24V Signal Connection

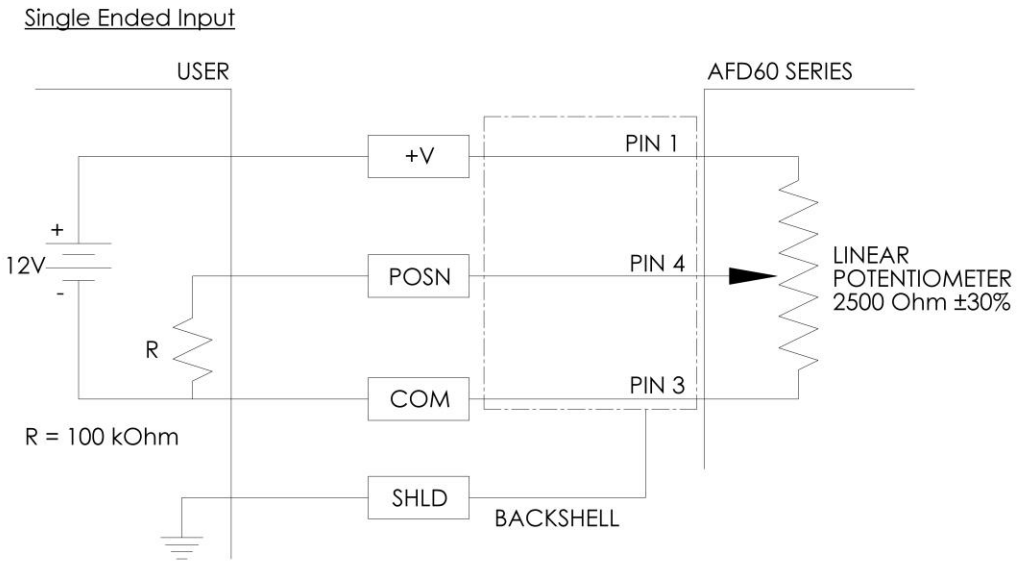

Figure 10: Linear Potentiometer 12V Signal Connection

NOTE: Care should be taken to ensure that all signal and voltage source commons are connected together on the user end to avoid D.C. offset errors.

5.0 ACHIEVING DESIRED FORCE

The *AFD62* is a passive force device that requires the user to provide air pressure to the pneumatic actuator. Pressure in the actuator results in an output force at the Carriage. If the AFD is always in the horizontal position or does not change orientation, achieving the desired output force is easy. However, if the AFD changes orientation and the output force must remain constant, then the pressure must be varied along the robot path.

Two system variables must be known to achieve a desired output force: the Weight carried by the AFD, and the angle of the Carriage with respect to gravity. The angle of the Carriage is required so that the Weight can be compensated for. The Weight is the sum of the process equipment and the AFD Carriage itself. This value can be back calculated from the area and pressure in the pneumatic actuator. The best method to determine the Weight is with a calibrated load cell. The angle of the Carriage to the Gravity Vector is defined as shown below in Figure 11.

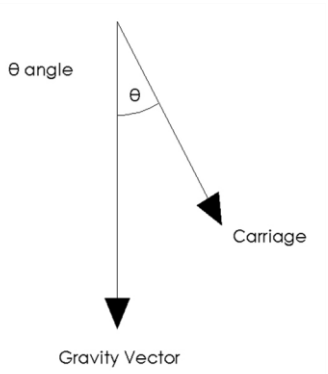

Figure 11: Definition of the Carriage Angle

The *AFD62* is available with two identical single-acting actuators acting in opposite directions. This allows the AFD62 to apply both positive and negative forces. The area of the cylinders are 0.3 in^2 (193.6 mm^2) so, for every one psi (0.07 bar) of supply pressure the AFD applies 0.3 lbs (1.33 N) of force. This makes the *AFD62* very easy to setup. To apply a 20 lbs. (89 N) force while in a horizontal orientation, just set the supply pressure to 66.7 psi (4.6 bar). This, however, does require the user to supply two precision pressure regulators to accurately adjust the applied force. The pressure regulator may be either a manually or electrically controlled proportional pressure regulator. The force output repeatability and resolution is directly related to the accuracy of the pneumatic regulator.
The following are equations defining the applied force from each of the *AFD62*.

AFD62 (Double Acting) Applied Force:

$$F_a = F_p - F_n + (W + 1.5)\cos(\theta)\ [English\ Units]$$

$$F_{am} = F_{pm} - F_{nm} + 9.81\ X(W + 0.68)\cos(\theta)\ \ [Metric\ Units]$$

Where:

$$F_a = Net\ AFD\ applied\ force\ (lbs)$$

$$F_{am} = Net\ AFD\ applied\ force\ (N)$$

$$F_p = Force\ in\ positive\ direction = \left(0.3\ X\ P_{sp}\right)(lbs)$$

$$F_n = Force\ in\ negative\ direction = (0.3\ X\ P_{sn})(lbs)$$

$$F_{pm} = Force\ in\ positive\ direction = \left(19.4\ X\ P_{sp}\right)(N)$$

$$F_{nm} = Force\ in\ negative\ direction\ (19.4\ X\ P_{sn})(N)$$

$$P_{sp} = Positve\ side\ supply\ pressure\ (psi\ or\ bar)$$

$$P_{sn} = Negative\ side\ supply\ pressure\ (psi\ or\ bar)$$

$$W = Weight\ (lbs\ or\ kg)$$

$$\theta = Carriage\ angle\ relative\ to\ gravity\ (See\ Figure\ 11)$$

6.0 TECHNICAL SPECIFICATIONS

Maximum Applied Force: 27 lbs. (120 N)
Maximum Payload: 27 lbs. (12.25 kg)
Weight: AFD62 4.3 lbs. (2.0 kg)
Force Scale Factor: 0.3 lbs/psi (19.4 N/bar)
Compliant Stroke: 0.8 in. (20 mm)
Temperature: 50° to 122° F (10° to 50° C)
Humidity: 5% to 95%, Non-Condensing
Supply air: Non-lubricated, Dry, 5µm Filtered, 90 psi (6.2 bar) Max.
Supply Voltage: 24 VDC ±10% Maximum

Specifications subject to change without notice.

Fastener Tightening Torque Specs

	Torque			Minimum Depth	
Fastener Size	In.-lbs.	ft.-lbs.	N·m	in.	mm
M4 x .7	50	4.2	5.6	0.17	4.3
M5 x .8	85	7.1	9.6	0.21	5.3
M6 x 1	140	11.7	15.8	0.25	6.3
M8 x 1.25	348	29.0	39.3	0.33	8.4
M10 x 1.5	600	50.0	67.8	0.41	10.5

7.0 PREVENTATIVE MAINTENANCE SCHEDULE

It is highly recommended to adhere to the preventative maintenance schedule in order help extend the longevity of the specified PushCorp, Inc. equipment. Failing to do so could cause a loss in functionality as well as a decrease in product life.

PUSHCORP AFD				
Maintenance	**Weekly**	**Monthly**	**3 Months**	**6 Months**
Remove debris from AFD	X			
Check that the connectors are not bent/damaged	X			
Check to see if the carriage moves back and forth easily	X			
Measure the supply and purge lines at the tool for recommended pressure/flow and ensure no losses in the pneumatic supply		X		
Check filters for contamination – replace if dark yellow/brown		X		
Replace filter cartridge(s)				X

Agency/Organization:_____

Date Completed:_____