AFD120

Adjustable Force Device



Manual

PUSHCORP

HANDLE WITH CARE
DO NOT DROP

DO NOT USE LUBRICATED AIR.

This device requires a dry, non-lubricated 80 psi (5.5 bar) maximum air supply filtered to 5 µm and a 0.3 micron oil mist separator.

Non-compliance with these requirements will void the manufacturer's warranty. (See Section 3.4)

All fasteners, mounting holes, and pipe threads on this tool are METRIC

All *PushCorp, Inc.* electrical cables are rated for high twist and flex robotic applications with a minimum cable bending radius specification of 125mm (5 in). Cable damage resulting from failure to abide by this specification will not be covered under warranty.

TABLE OF CONTENTS

1.0 Limited Warranty 1
2.0 General Overview 3
3.0 Quick Start 4
4.0 Installation 5
4.1 Mounting Process Equipment 5
4.2 Mounting the *AFD62* 7
4.2.1 Mounting the AFD120-1 Vertical and AFD120-2 Horizontal 7
4.3 Maximum Carriage Load Calculations 9
4.4 Pneumatic Connection 11
5.0 Electrical Connections 13
5.1 Indicator Lights 13
5.2 USB-C Connection 14
6.0 Ethernet Interface 15
6.1 Console Command Interface 15
6.2 Web and UDP Command Interface 16
6.3 AFD Command Descriptions 18
6.3.1 AFD Root Descriptions 18
6.3.2 AFD Network Commands 20
7.0 Technical Specifications 21
8.0 Preventative Maintenance Schedule 22

1.0 LIMITED WARRANTY

Duration:

One year from date of delivery to the original purchaser.

Who gives this warranty:

PushCorp
Telephone: (972) 840-0208

Corporate Address:
P. O. Box 181915
Dallas, Texas 75218

Shipping Address:
3001 W. Kingsley Rd.
Garland, Texas 75041

Who gives this warranty (purchaser):

The original purchaser (other than for purposes of resale) of the *PushCorp* product

What products are covered by this warranty:

Any *PushCorp* industrial equipment or accessory supplied of manufactured by the Warrantor.

What is covered under this warranty:

Defects in material and/or workmanship which occur within the duration of the warranty period

What is not covered in this warranty:

A. IMPLIED WARRANTIES, INCLUDING THOSE OF MERCHANT-ABILITY AND FITNESS FOR A PARTICULAR PURPOSE ARE LIMITED TO ONE YEAR FROM THE DATE OF ORIGINAL PURCHASE. Some states do not allow limitations on how long an implied warranty lasts, so the above limitations may not apply to you.

B. ANY INCIDENTAL, INDIRECT, OR CONSEQUENTIAL LOSS, DAMAGE or EXPENSE THAT MAY RESULT FROM ANY DEFECT, FAILURE, MALFUNCTION OF THE *PUSHCORP, INC.* PRODUCT. Some states do not allow the exclusion or limitation of incidental or consequential damages so the above limitation or exclusion may not apply to you.

C. Any failure that results from an accident, purchaser's abuse, neglect, unauthorized repair or failure to operate the products in accordance with the instructions provided in the owner's manual(s) supplied with the product.

Responsibilities of the Warrantor under this warranty:

Repair or replace, at Warrantor's option, products or components which have failed within the duration of the warranty period.

Responsibilities of the purchaser under this warranty:

A. Deliver or ship the *PushCorp, Inc.* product or component to PushCorp, Inc. Service Center, Dallas, TX. Freight and insurance costs, if any, must be borne by the purchaser.

B. Use reasonable care in the operation and maintenance of the product as described in the owner's manual(s).

When warrantor will perform repair or replacement under this warranty:

Repair or replacement will be scheduled and serviced according to the normal work flow at the service center, and depending on the availability of replacement parts. Purchasers requiring quicker repair may receive such with payment of a *PushCorp, Inc.* predetermined expediting fee.

This Limited Warranty gives you specific legal rights and you may also have other rights which vary from state to state.

2.0 GENERAL OVERVIEW

The *PushCorp, 120 Series* Adjustable Force Device was designed to be a small, light weight active compliance device. It is the smallest & lightest active tool in the line up. As such, the *120 Series* is a great fit for small to medium size robots. To reduce operating friction and increase force accuracy the *120 Series* uses glass pneumatic cylinders with graphite pistons, and linear guide rails. The *AFD120* incorporates an internal linear potentiometer that allows the monitoring of the carriage position during operation. It has two robot mounting configurations, the "-1" & "-2". Brackets for both mounting configurations are provided.

The *120 Series* utilizes a pneumatic actuator to provide constant force and provide closed-loop feedback. The 120 series can apply up to 27 lbs. (120 N) of force. The AFD contains an accelerometer that monitors orientation and allows the unit to automatically compensate for gravitational and inertial effects. A linear potentiometer is also present within the AFD to determine the position of the carriage.

The only external connection that is required to operate the 120 Series is filtered, non-lubricated 80-90 psi (5.5-6.2 bar) supply air provided through flexible tubing. An inline filter is required to prevent any moisture from entering the tool. The AFD120 features a purge port, which allows the user to connect an additional airline. The purge port provides additional airflow and internal positive pressure to help minimize the amount of contamination infiltrating the interior of the AFD. PushCorp highly recommends utilizing this feature to keep the inside cavity clean, which will prolong the life of the tool. The AFD's sliding carriage has threaded mounting holes to provide easy process equipment attachment.

It is recommended that the user read the entire manual before beginning any operations to fully understand all the aspects and features of the 120 Series. All these features combine to make the PushCorp 120 Series Adjustable Force Device a rugged, state-of-the-art technology capable of providing reliable, precise, and consistent results in a variety of industrial applications.

3.0 QUICK START

This section contains step-by-step instructions on how to quickly get the 310 *Series* Adjustable Force Device up and running for a quick test of its capabilities. Complete details on all the features are described in the sections that follow.

Step 1: Carefully unpack the 310 *Series* Force Device and verify that all parts indicated on the packing list are present and in good condition. If there is a problem, please notify the factory immediately so that corrective action may be promptly initiated.

Step 2: Securely attach the 310 *Series* Mounting Bracket to the manipulator mounting flange or support table per Section 4.2.

Step 3: Connect a dry, non-lubricated, 5 µm filtered 80 to 90 psi (5.5 to 6.9 bar) air supply to the 310 *Series* per Section 4.4.

Step 4: Consult the FCU-FLEX Manual for electrical connections and software setup information.

Please read the following sections to learn the full potential and features of the *PushCorp 310 Series* Adjustable Force Device.

4.0 INSTALLATION

4.1 Mounting Process Equipment

The *AFD120* Adjustable Force Device is designed to accommodate the PushCorp SM1202 and RPS100. However, many end users also develop process equipment for their own proprietary applications. The AFD can be oriented parallel (-1) or perpendicular (-2) to the manipulator mounting flange, although it is important to note that the AFD can apply force only in the direction of the carriage's linear travel.

When mounting process equipment to the carriage, extreme care should be taken while designing and installing the brackets. Correctly designed brackets will increase the stiffness of the carriage by becoming an external superstructure for the carriage. The carriage can gain a tremendous amount of rigidity if this approach is executed correctly. Incorrectly designed brackets will deform the carriage causing internal linear rail misalignment. A symptom of carriage deformation is "slop" or "binding" of the Carriage. A deformed or loose Carriage will damage the Linear Rails and affect the consistency of your process. If the Carriage becomes loose or binds after installing the process equipment, then the brackets must be removed and the problem corrected. *PushCorp* can design and fabricate brackets to user supplied specifications as an option.

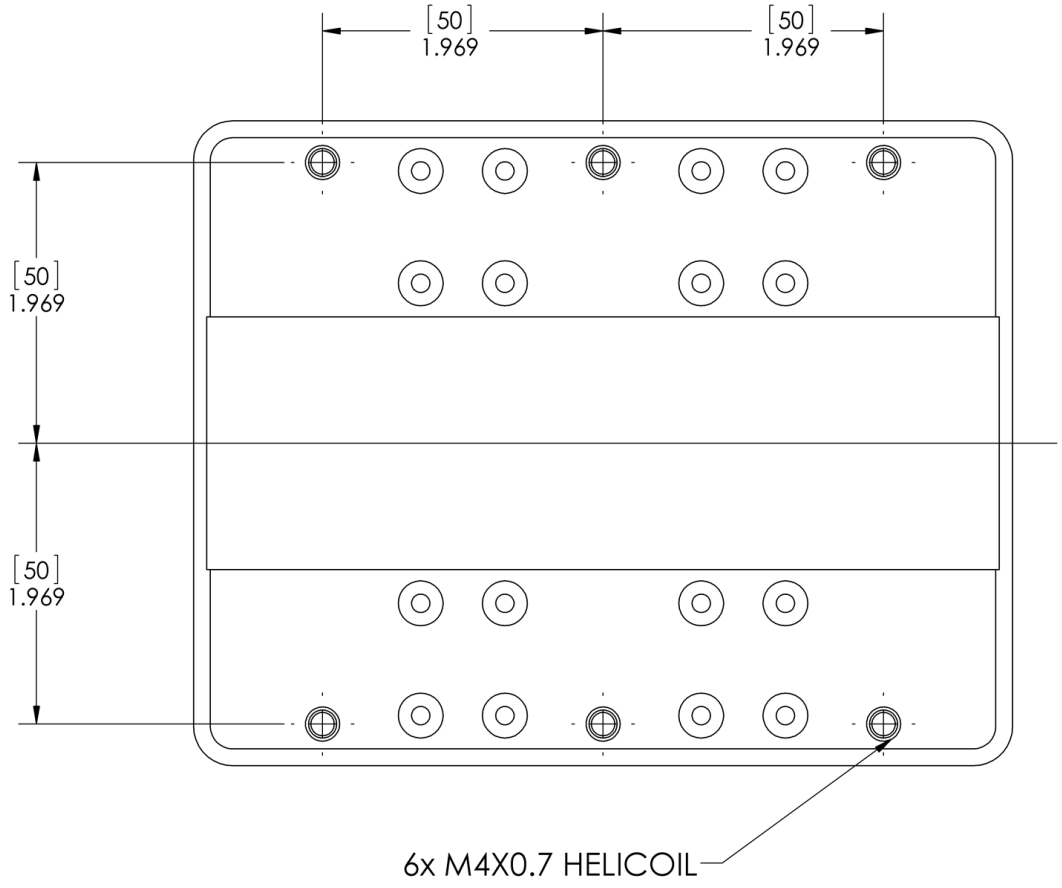

Figure 1: Carriage Bolt Hole Pattern

The bolt pattern on the Carriage has been designed to facilitate process equipment installation. The Carriage has (6) six M4x0.7 mounting holes with a depth of 0.26 inch (6.5 mm) to provide secure attachment points. The mounting holes are spaced 100mm across and on 50mm centers along the length of the Carriage. (See Figure 1)

Care must be taken when designing and manufacturing brackets that will be mounted to the linear carriage. It is essential that these brackets maintain a face to face parallelism of at least 0.001” in order to prevent binding, which can lead to inaccurate applied force. As a result, we recommend using tooling plate for the stock material, or blanchard grinding the mounting faces.

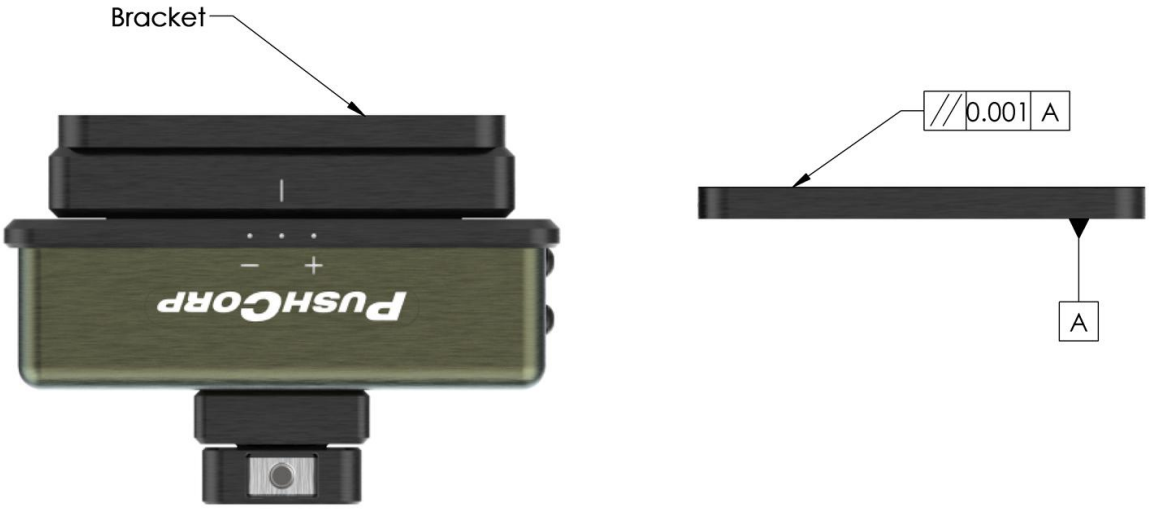

Figure 2: Carriage Mount Bracket - Parallelism

If those options are not practical for your design, machined steps or the use of shims under bolted surfaces are also suitable. We recommend a height of 0.02” to ensure enough clearance between the carriage and the mounting plate.



Figure 3: Carriage Mount Bracket - Shims

4.2 Mounting the *AFD62*

The basic configuration of the *AFD120* force device allows attachment to a stationary fixture or a robotic manipulator mounting flange. Specifying an AFD120 -1 or -2 determines how the Mounting Bracket is mounted to the AFD.

4.2.1 Mounting the AFD120-1 Vertical and AFD120-2 Horizontal

The *AFD120*-1 and *AFD120*-2 are supplied with a standard Mounting Bracket shown in Figure 4. All 4 mounting holes should be utilized to secure the Mounting Bracket to the robot mounting flange. If your robot flange does not feature an ISO 50 bolt pattern, then an adapter plate can be utilized. Your PushCorp Sales representative can help select the needed components.

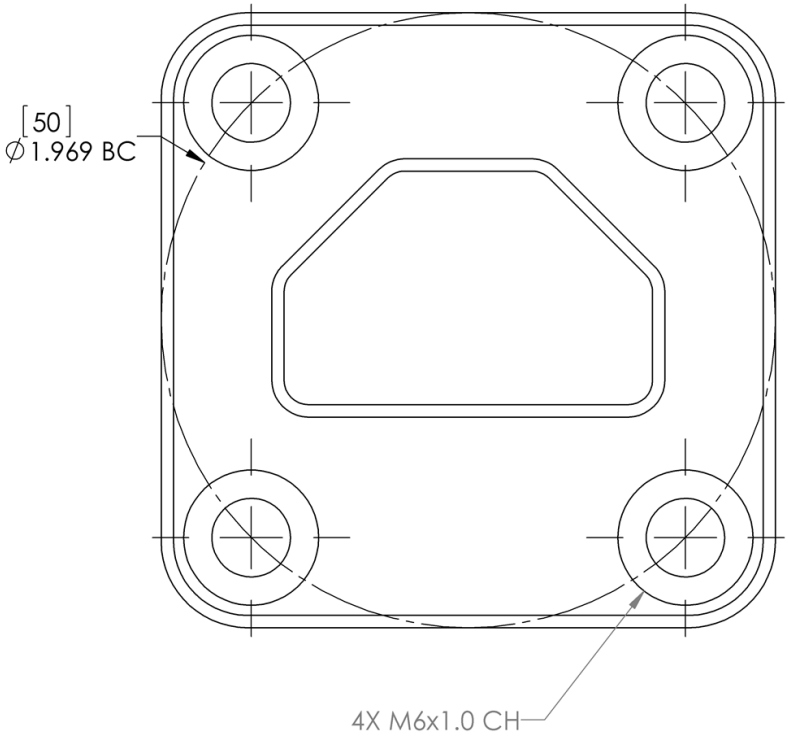

Figure 4: AFD120 Mounting Bracket

Depending on the application, a -1 or -2 mounting configuration can be specified at the time the order is placed, but both brackets will be provided for your convenience. The AFD120-1 can be seen in Figure 5 and the AFD120-2 can be seen in Figure 6. The -1 configuration puts the linear compliant stroke inline with the robot arm, whereas the -2 configuration is perpendicular. Depending on the geometry of the part, the -1 or -2 may help access more features and allow for easier robot programming. If you have any questions regarding your specific process, please reach out to your sales representative.

Both the -1 and -2 are attached to the robot in the exact same manner. The AFD120 mounting bracket shown in Figure 5 & 6 is mounted to joint 6 of the robot first. Then, the

-1 or -2 mounting flange is aligned and positioned into the mounting bracket such that the THRU holes are aligned. At that point, the M8x1.25 shoulder bolt should be inserted and threaded into the AFD120 mounting bracket to tighten the assembly as shown in Figure 8. This bolt should be torqued to 40N-m (30ft-lbs).

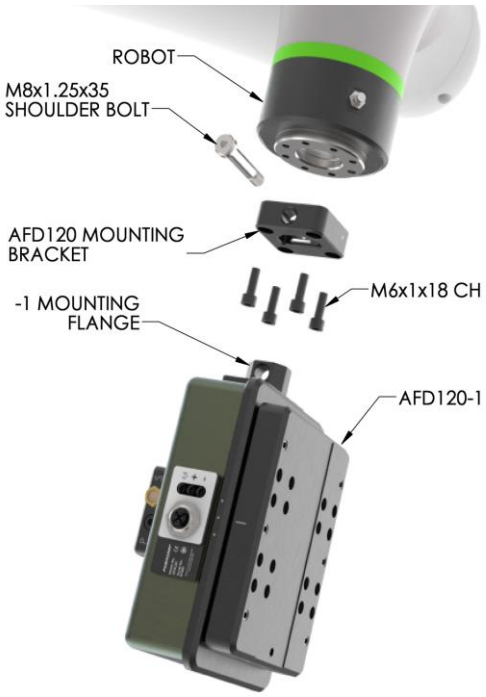

Figure 5: AFD120-1 Mounting



Figure 6: AFD62-2 Mounting

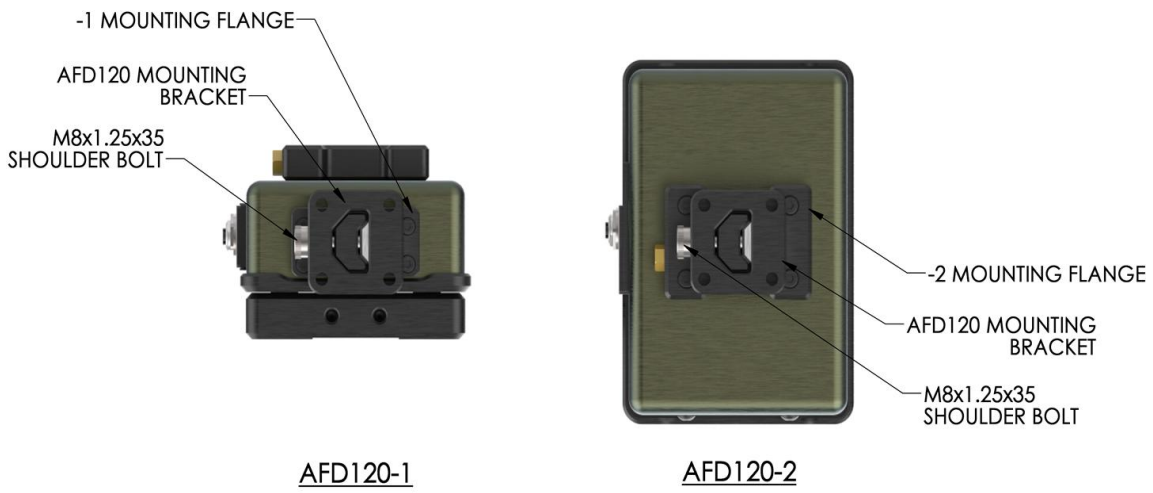

Figure 7: Joint 6 Mounting

4.3 Maximum Carriage Load Calculations

The Linear Rail bearings that support the *AFD120* Carriage have been selected to provide optimal performance with respect to capacity, size, and low friction. To ensure continued optimal performance it is very important not to overload these bearings. The following diagrams and associated equations are provided to check your application for excessive loading.

It is important to note that these equations **require** the use of Metric units. The necessary conversions are provided for your convenience. Insert your maximum applied force and process equipment weight (W) and Load Overhang Distances (D) to calculate an actual Bearing Load (L) that must be less than the maximum Bearing Load shown on the right side of the equation. The life of the bearings is 100,000 meters of linear motion, at the maximum allowable Bearing Load value. Exceeding this value (L) will reduce the life, and operating at less than this value (L) will increase the life. It is common to have combined weight and force loads on the Carriage. These situations will require adding two or more of the scenarios shown below. The sum of the different weight and force loads must be less than the Bearing Load (L). If the AFD120 is placed in multiple orientations, then the Bearing Load (L) should be checked for each one. If your application is not similar to any of the designs listed here, or if the information is not clear, please contact *PushCorp* Technical Support for assistance.

W = MAXIMUM APPLIED FORCE
D = LOAD OVERHANG (MM)
L = BEARING LOAD (N)
X = CONCENTRATED LOAD POSITION

1 lbf = 4.45 N
1 in = 25.4mm
1 N = 0.102 kg
FOS = 4

CASE 1

PROFILE RAIL BEARINGS:

$$L = W\ (0.25+\frac{D+73}{100}) < 1052.5$$

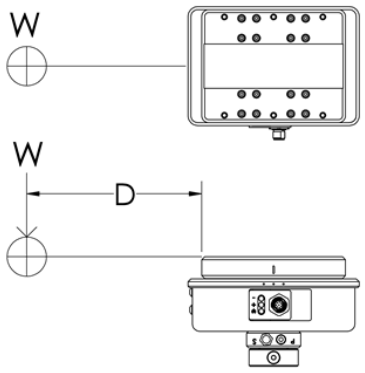

CASE 2

PROFILE RAIL BEARINGS:

$$L = \frac{W}{4} < 1052.5$$

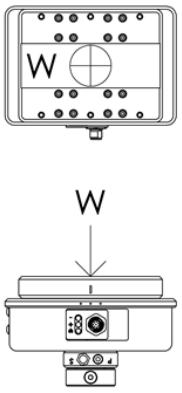

CASE 3

PROFILE RAIL BEARINGS:

$$L = W(\frac{D+17}{100}) < 1052.5$$

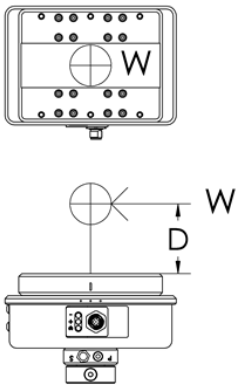

4.4 Pneumatic Connection

The 120 *Series* Adjustable Force Devices require a dry, non-lubricated, 5 µm filtered, 80 to 90 psi (5.5 – 6.2 bar) air supply. Failure to provide supply air to these specifications can degrade performance and will void any warranty repairs concerning pneumatic components. Filtered air is required since the high speed servo spool valve used in the AFD cannot tolerate *ANY* foreign material in the supply air. Additionally, a *minimum* 80 psi (5.5 bar) air pressure must be maintained at the supply air port for the device to operate within published specifications. Operating at lower air pressure can cause inferior force control performance and possibly instability. Operating the AFD at pressures over 90 psi (6.2 bar) will activate a pressure relief valve inside the tool. This valve prevents damage to the internal load cell due to operating the tool with excessive pressure. This relief valve is strictly a protective mechanism and should not be used as a pressure regulator device.

The pneumatic supply system should be configured as shown in Figure 8.

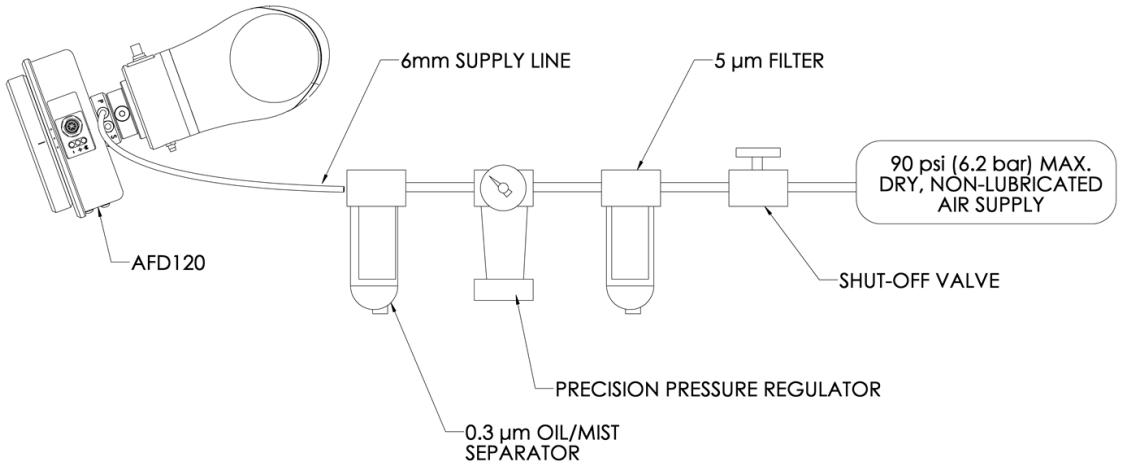

Figure 8: Pneuamtic Configuration

If water condensation is a problem in your air supply system, an air dryer device is highly recommended. The ideal solution is an industrial chiller dryer capable of reducing the dew point to less than 32 °F (0°C). Moisture inside the force device will cause premature failure that will not be covered under warranty.

Under most circumstances the standard internal purge will provide sufficient air to keep the 120 *Series* free of contaminates. In applications where the environment contains very small suspended particulate matter, additional purge air flow must be used to ensure that the AFD remains clear of foreign matter. An auxiliary Purge Port on the 120 *Series* (See Figure 8) provides a pneumatic connection to supply this additional air flow. The port accepts a metric R 1/8 tapered pneumatic fitting. PushCorp can provide fittings for english or metric tubing. The input pressure to the purge port can range from 10 PSI to 60 PSI (0.7 – 4.1 bar) with a flow rate of 0.5 to 2.0 SCFM (14 – 56 l/min) depending on the application. The purge air must be dry and non-lubricated, however it need only be filtered to 20 microns.



Figure 9: AFD120 Air Connections

The Supply Line and Purge Line to the device should be 1/4 inch or 6mm diameter flexible polyurethane tubing. The tubing should be routed to the AFD such that there are no kinks and that there is plenty of slack to allow for manipulator motion. Before inserting the Supply Line into the force device air fitting, open the Shut-Off valve to blow out any contaminates which may be in the line. The tubing can now be pushed into the self-locking fitting located on the side of the AFD. Charge the Supply Line with compressed air and verify that there are no air leaks and that there is a minimum of 80 PSI (5.5 bar) at the AFD. If a minimum air pressure cannot be achieved, then an auxiliary air compressor or booster pump with at least 2 SCFM (56 l/min) must be installed.

NOTE: PushCorp highly recommends the use of flexible polyurethane tubing as opposed to nylon tubing. This is because nylon tubing tends to crimp shut when it is bent. This severely limits air flow to the AFD and causes instability.

To remove the Supply Line, first discharge all air pressure in the system, then while pushing inward on the fitting's plastic ring, simultaneously pull the tubing out. Cover or plug the self-locking fitting any time the Supply Line is not connected. This will keep any contaminants from entering the AFD.

5.0 ELECTRICAL CONNECTIONS

5.1 Indicator Lights

The AFD120 features 3 indicator lights to show the current status of the tool. that displays controller connectivity and carriage position status via 3 indicator lights.

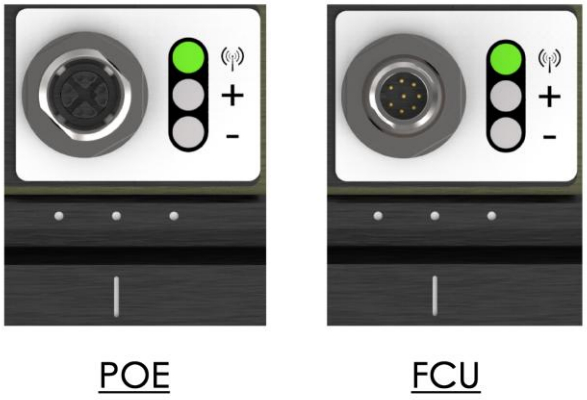

Figure 10: AFD120 Indicator Lights

Symbol	Description
Signal	Pulsing light indicates normal connection
+ LIMIT	ON indicates that the AFD carriage is positioned beyond the current positive limit setting.
- LIMIT	ON indicates that the AFD carriage is positioned beyond the current negative limit setting.

There are two versions of the AFD120: the AFD120-FCU & AFD-POE. The FCU version is designed to communicate with the FCU controller. The POE version allows the user to bypass the FCU and communicate directly with a PLC or robot controller via Power Over Ethernet (POE). This method is outline in Section 5.0.

5.2 USB-C Connection

The AFD120 features an externally assessable USB-C connector for direct communication with the tool via a PC. This can be used to send commands to the tool via the AFD Dashboard software or to load new firmware. To access the USB-C, a 20mm socket should be used to loosen the connector locknut. With this component removed, the indicator light plate is able to be freely rotated. This will allow access to the USB-C. Repeat this in reverse order to securely fasten then indicator light plate back to it's original position. Failure to do so will allow dust and other contaminants inside the tool.



Figure 11: USB-C Connection

6.0 ETHERNET INTERFACE

The AFD has an Ethernet network connection that may be used to configure and control all aspects of the tool. The default factory network configuration is set to:

IP Address: 192.168.0.10
Network Mask: 255.255.255.0

In order to utilize the Ethernet connection instead of the FCUFLEX Controller, an appropriate adapter cable must be purchased from PushCorp to provide a standard Ethernet RJ45 network connection. Power must be provided to this connector via an external PASSIVE Power-Over-Ethernet (POE) injector. The POE injector must provide power to the RJ45 connector on Pins 4,5: +24VDC, Pins 7,8: -24VDC. The factory default AFD host name is “AFD-xxxxx” where “xxxxx” is the serial number of the AFD controller.

6.1 Console Command Interface

The Console Command Interface can be accessed via the USB serial interface or over ethernet via a standard Telnet session (TCP Port 23). All commands are standard ASCII strings. Upon power up the following sign message is transmitted:

```
AFD Console Interface[CR][LF]
HW Version: 1.0  SW Version: 1.0[CR][LF]
Build Date: Jan 01 2018, 00:00:00[CR][LF]
```

NOTE: [CR] is ASCII 0D hex or 13 decimal. [LF] is ASCII Line Feed, ASCII 0A hex or 10 decimal. HW and SW Versions and Build Date will vary depending on software revision.

This message is then followed by the command prompt: ">>". This prompt follows all command and indicates that the previous command is complete and that the unit is ready to accept additional commands.

All commands must be in the following format:

Command [*Arguments*]*[LF]*

where "*Command"* is a command mnemonic and "*Arguments"* is optional data representing any necessary arguments for the given command. Each character of the transmitted string is echoed back to the sender (including the terminating [LF]). This provides a mechanism to verify accurate data transmission.
Upon reception of the terminating [LF], the unit may respond to a command in one of three possible ways:

1. A successful command with no returned data:
   Response String: OK[CR][LF]

2. A successful command returning parameter data:
   Response String: *Data*[CR][LF]
3. An unsuccessful command:
   Response String:
   Error: Error Object [Error No]: Error Description[[CR][LF]

The following section describes the various commands to control and configure the AFD controller.

6.2 Web and UDP Command Interface

The AFD can be configured and controlled via web (TCP Port 80) and UDP (Port 1993) socket requests. For both of these interfaces all returned data will be formatted as a JSON object.
The returned JSON object will always have two top level keys: “status” and “data”. The “status” key will always have one of two values. A value of “success” indicates that the command was successful and the “data” value will be either the requested parameter value or “OK” for commands that return nothing.

A “status” value of “fail” indicates that there was an error. In this case the “data” key will contain a string describing the failure.

UDP Socket Example

A UDP message with an ASCII (UTF-8) text string containing the command to be executed should be sent to port 1993 on the AFD.

Requesting a parameter
Send string:
```
/afd/commandForce
```
Reply string:
```
{"data":{"/afd/commandForce":12.0000},"status":"success"}
```

Setting a parameter
Send string:
```
/afd/deviceName=fred
```
Reply string:
```
{"data":{"/afd/deviceName":"OK"},"status":"success"}
```

Command Failure
Send string:
```
/afd/badCommand=24.2
```
Reply string:
```
{"data":{"/afd/badCommand":"Error: RpcObject[1]: Unknown Method"},"status":"fail"}
```

Web Request Example
A request can be sent from a web browser to the AFD with URL string containing the command to be executed.
Requesting a parameter
Send string:
```
http://afd-00000/afd/commandForce
```
Reply string:
```
{"data":{"commandForce":12.0000},"status":"success"}
```

Setting a parameter
Send string:
```
http://afd-00000/afd/deviceName=fred
```
Reply string:

```
{"data":{"/afd/deviceName":"OK"},"status":"success"}
```

6.3 AFD Command Descriptions

The parameters and commands of the *AFD* are organized in a hierarchical directory tree structure to access various system components as shown below:

/afd (or "/")

/afd/net

The top-level or root is the initial working directory and allows access to the *AFD* top-level commands. The root directory also can be accessed either explicitly by "/afd" by its default alias "/".

A command or parameter can always be accessed be specifying its complete canonical name starting from the root. For example, to access the *AFD*'s Serial Number the canonical command would be "/afd/serialNo".

The parameters and commands themselves are descriptive "Camel Case" strings (individual words delineated by capital letters, e.g. "camelCase") and starting with a lower case letter. The command or parameter can be abbreviated by using the first letter followed by each of the remaining capitalized letters. For example the "weighingInProgress" parameter is abbreviated "wip". If there are no capital letters, then the entire parameter or command name must be used.

6.3.1 AFD Root Descriptions

Command	*Command Description*	*Data Type*	*Read/Write*
/afd/help	Displays all available commands	LIST	Read
/afd/firmWareVersion	Device firmware version	FLOAT	Read
/afd/hardWareVersion	Device hardware version	FLOAT	Read
/afd/modelName	Device model name (e.g. "AFD310")	STRING	Read
/afd/serialNo	Device serial number	INTEGER	Read
/afd/metricUnits	Metric or English units	INTEGER	Read/Write
/afd/maxForce	Maximum force capacity 0: English, 1: Metric	FLOAT	Read
/afd/maxPosition	Maximum position capacity	FLOAT	Read
/afd/deviceName	User assignable device name	STRING	Read/Write
/afd/initialWeigh	Enable/disable weigh payload on power-on 0: Disabled, 1: Enabled	INTEGER	Read/Write
/afd/initialMode	Sets initial power-on controlMode 0: Position Mode, 1: Force Mode, 3: Soft Touch Mode	INTEGER	Read/Write
/afd/initialForce	Sets initial power-on commandForce.	FLOAT	Read/Write
/afd/initialPosition	Sets initial power-on commandPosition	FLOAT	Read/Write
/afd/posLimitPosition	Sets the positive position limit threshold	FLOAT	Read/Write
/afd/negLimitPosition	Sets the negative position limit threshold	FLOAT	Read/Write
/afd/posLimit	Position Limit status -1: Neg Limit, 0: In Range, 1: Pos Limit	INTEGER	Read

Command	Command Description	Data Type	Read/Write
/afd/softTouchEnabled	Enable/disable Soft Touch feature 0: Disabled, 1: Enabled	INTEGER	Read/Write
/afd/softTouchForce	Set soft touch force as multiplier of comandForce 0.1 – 1.0	FLOAT	Read/Write
/afd/softTouchPosition	Set soft touch position as multiplier of maxPosition 0.1 – 1.0:	FLOAT	Read/Write
/afd/softTouchActive	Soft Touch feature is currently in effect 0: Inactive, 1: Active	INTEGER	Read
/afd/controlMode	Sets basic mode of operation 0: Position Mode, 1: Force Mode, 3: Soft Touch Mode	INTEGER	Read/Write
/afd/commandForce	Sets desired level of force when in Force Mode. May be positive or negative to push in either direction.	FLOAT	Read/Write
/afd/commandPosition	Sets desired carriage position when in Position Mode. May be only be a positive number 0.0: Fully negative, *maxPosition*: Fully positive	FLOAT	Read/Write
/afd/payloadWeight	Sets the current payload weight. This parameter can be measured automatically by executing the *weighPayload* command.	FLOAT	Read/Write
/afd/weighPayload	The command initiates the automatic payload weight measurement sequence.	N/A	Read/Write
/afd/weighAtPosition	This parameter returns whether the AFD tool is in the vertical position needed to execute the *weighPayload* command. 0: Not in position, 1: In position	INTEGER	Read
/afd/weighingInProgress	Returns whether the *weighPayload* sequence is in process 0: Not in progress, 1: In progress	INTEGER	Read
/afd/weightValid	Indicates that the current *payloadWeight* status 0: Weight invalid (*weighPayload* was unsuccessful) 1: Weight valid, -1: *weighPayload* sequence is in process	INTEGER	Read
/afd/actualForce	Returns the current measured applied force	FLOAT	Read
/afd/actualPosition	Returns the current measured carriage position	FLOAT	Read
/afd/accelGravity	Returns the current measured Acceleration of Gravity in G's 1.0: Vertical + downward, 0.0: Horizontal, -1.0 Vertical upward	FLOAT	Read
/afd/stateObject	Return JSON object representing the current device state	JSON	Read
/afd/dumpCfg	Dumps the current *AFD* user configuration	LIST	Read
/afd/saveConfig	Save the current FCUFLEX user configuration to non-volatile FLASH memory	NONE	Write

Table 1: AFD Commands

6.3.2 AFD Network Commands

Command	*Command Description*	*Data Type*	*Read/Write*
/net/help	Displays all available commands	LIST	Read
/net/hostName	Network host name	STRING	Read/Write
/net/dhcp	Set to use DHCP server to obtain IP address 0: Static IP, 1: DHCP	INTEGER	Read/Write
/net/timeout	Time out for DHCP server (Seconds)	INTEGER	Read/Write
/net/ipAddress	Returns currently assigned IP address	STRING	Read
/net/gateway	Returns currently assigned network gateway IP address	STRING	Read
/net/netMask	Returns currently assigned network mask	STRING	Read
/net/macAddress	Returns Ethernet hardware (MAC) address	STRING	Read
/net/linkStatus	Returns link status of Ethernet interface 0: Disconnected, 1: Waiting for IP address, 2: Connected	INTEGER	Read

Table 2: AFD Commands

7.0 TECHNICAL SPECIFICATIONS

Maximum Applied Force: 27 lbs. (120 N)
Maximum Payload: 27 lbs. (12.25 kg)
Weight: 5.1 lbs. (2.3 kg)
Compliant Stroke: 0.8 in. (20 mm)
Temperature: 50° to 122° F (10° to 50° C)
Humidity: 5% to 95%, Non-Condensing
Supply air: Non-lubricated, Dry, 5µm Filtered, 90 psi (6.2 bar) Max.
Supply Voltage: 24 VDC ±10% Maximum

Specifications subject to change without notice.

Fastener Tightening Torque Specs

Fastener Size	Torque			Minimum Depth	
	In.-lbs.	ft.-lbs.	N·m	in.	mm
M4 x .7	50	4.2	5.6	0.17	4.3
M5 x .8	85	7.1	9.6	0.21	5.3
M6 x 1	140	11.7	15.8	0.25	6.3
M8 x 1.25	348	29.0	39.3	0.33	8.4
M10 x 1.5	600	50.0	67.8	0.41	10.5

8.0 PREVENTATIVE MAINTENANCE SCHEDULE

It is highly recommended to adhere to the preventative maintenance schedule in order help extend the longevity of the specified PushCorp, Inc. equipment. Failing to do so could cause a loss in functionality as well as a decrease in product life.

PUSHCORP AFD				
Maintenance	**Weekly**	**Monthly**	**3 Months**	**6 Months**
Remove debris from AFD	X			
Check that the connectors are not bent/damaged	X			
Check to see if the carriage moves back and forth easily	X			
Measure the supply and purge lines at the tool for recommended pressure/flow and ensure no losses in the pneumatic supply		X		
Check filters for contamination – replace if dark yellow/brown		X		
Replace filter cartridge(s)				X

Agency/Organization:_____

Date Completed:_____