UNIVERSAL ROBOTS

# Installation Guide

## OEM Control Box

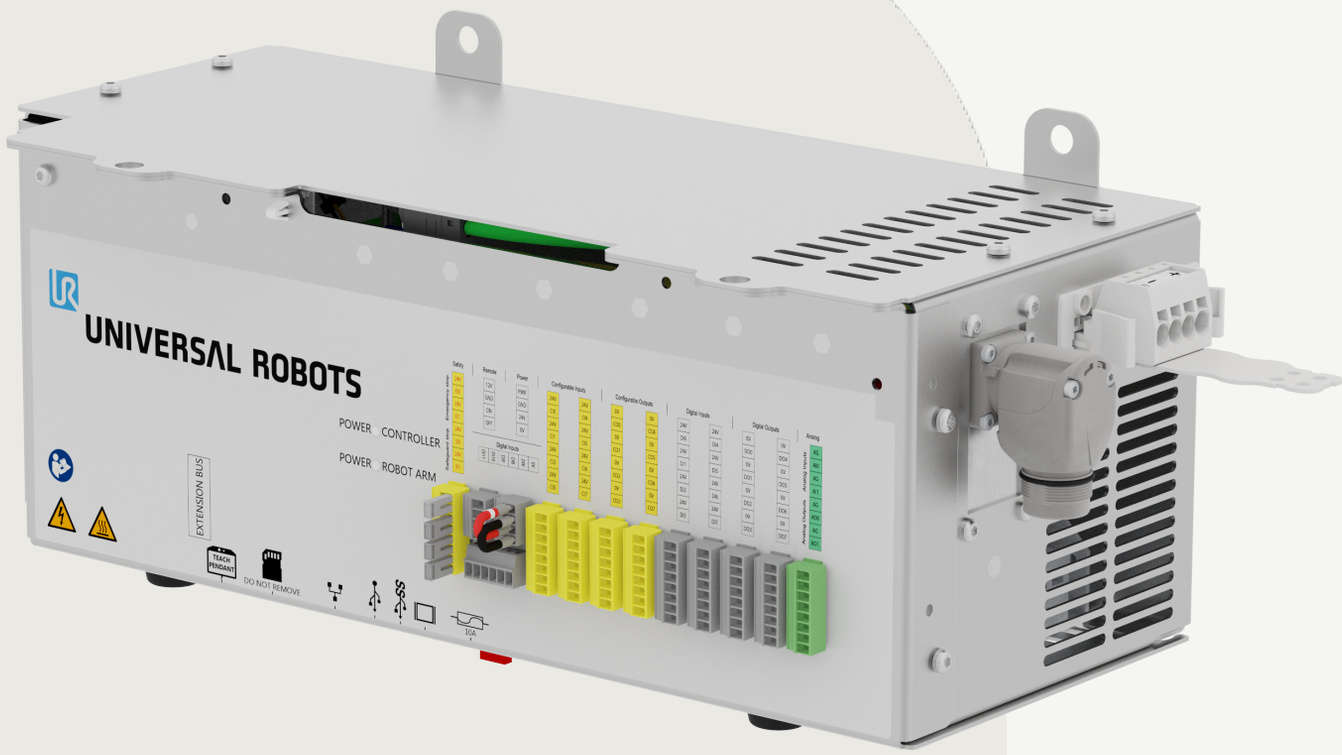


Original instructions (en)

PolyScope 5

Copyright © 2019-2025 by Universal Robots A/S. All rights reserved.

The information contained herein is the property of Universal Robots A/S and shall not be reproduced in whole or in part without prior written approval of Universal Robots A/S. The information herein is subject to change without notice and should not be construed as a commitment by Universal Robots A/S. This document is periodically reviewed and revised.

Universal Robots A/S assumes no responsibility for any errors or omissions in this document.

Copyright © 2019–2025 by Universal Robots A/S.

The Universal Robots logo is a registered trademark of Universal Robots A/S.

Copyright © 2019-2025 by Universal Robots A/S. All rights reserved.

Copyright © 2019-2025 by Universal Robots A/S. All rights reserved.

# Contents


**1. About this Document** ..... **10**

1.1. About this Document ..... 10

1.2. Contact Information ..... 10

**2. What's in the Box** ..... **11**

**3. Safety** ..... **12**

3.1. Safety Message Types ..... 13

3.2. General Safety Precautions ..... 14

3.3. OEM AC FlexTail Safety Precautions ..... 15

**4. Electrical Installation: AC** ..... **16**

4.1. Required Items ..... 16

4.1.1. How to Connect Wires to the Connector ..... 17

4.2. Power Source Wiring: AC ..... 17

4.2.1. Robot Connection ..... 19

4.2.2. Circuit Breaker Installation ..... 20

**5. Electrical Installation: OEM AC FlexTail** ..... **21**

5.1. How to Connect Wires to the Connector ..... 22

5.2. Robot Connection for OEM AC FlexTail ..... 22

5.2.1. Circuit Breaker Installation ..... 24

**6. Electrical Installation: DC** ..... **25**

6.1. Required Items ..... 25

6.1.1. How to Connect Wires to the Connector ..... 26

6.2. Power Source Wiring: DC ..... 26

6.2.1. Robot Connection ..... 27

6.2.2. Circuit Breaker Installation ..... 28

**7. Mechanical Installation** ..... **29**

7.1. Working Environment Guidelines ..... 29

7.2. Mounting the OEM Control Box ..... 29

7.2.1. Grounding ..... 30

**8. Connecting External Devices** ..... **31**

8.1. External Device Connection Ports ..... 31

8.1.1. How to Connect a Teach Pendant ..... 32

8.1.2. How to Use Remote Control and Local Control ..... 33

8.2. Connecting Devices ..... 34

8.2.1. To Connect a 3-Position Enabling Device ..... 34

8.2.2. To Connect an Operational Mode Switch ..... 35


Copyright © 2019-2025 by Universal Robots A/S. All rights reserved.

8.3. Remote ON/OFF Control and Emergency Stop ..... 36
8.3.1. Connecting the ON/OFF Control ..... 36
8.3.2. Connecting the Remote Emergency Stop ..... 36
**9. OEM Control Box Specifications ..... 37**
9.1. Technical Specifications ..... 37
9.2. Electrical Specifications ..... 37
9.3. Control Unit Heat Dissipation ..... 38
9.4. Dimensional Drawings [mm] ..... 39
9.5. Dimensional Drawings [mm] OEM AC FlexTail ..... 40
**10. Troubleshooting ..... 41**
10.1. OEM Control Box AC variant ..... 41
10.2. OEM Control Box DC variant ..... 41
**11. Robot Arm Cleaning and Inspection ..... 42**
**12. Cable Strain Relief Bracket ..... 46**
12.1. OEM Control Box AC ..... 46
12.2. OEM Control Box DC ..... 48
**13. Certifications ..... 49**
13.1. Declarations and Certificates (original) ..... 50
13.1.1. Declaration of Incorporation (original EN) ..... 50

Copyright © 2019-2025 by Universal Robots A/S. All rights reserved.

Copyright © 2019-2025 by Universal Robots A/S. All rights reserved.

# 1. About this Document

## 1.1. About this Document

**Description**

This guide describes Universal Robots OEM Control Box installation and how to connect the OEM Control Box to both AC and DC power sources.

This guide also describes installation for the latest version of the OEM Control Box, the OEM AC FlexTail.

**NOTICE**

Universal Robots disclaims any liability, even if all guidelines in this document are followed.

## 1.2. Contact Information

**Company Details**

Universal Robots A/S
Energivej 51, 5260 Odense S, Denmark
+45 89 93 89 89
https://www.universal-robots.com

Copyright © 2019-2025 by Universal Robots A/S. All rights reserved.

# 2. What's in the Box

**Description**

The box contains the following items:

- The OEM Control Box
- This document
- WAGO 831 four-pole female connector
- Cable strain relief bracket

Copyright © 2019-2025 by Universal Robots A/S. All rights reserved.

# 3. Safety

Copyright © 2019-2025 by Universal Robots A/S. All rights reserved.

# 3.1. Safety Message Types

**Description**

Safety messages are used to emphasize important information. Read all the messages to help ensure safety and to prevent injury to personnel and product damage.



**WARNING**

Indicates a hazardous situation that, if not avoided, can result in death or serious injury.



**WARNING: ELECTRICITY**

Indicates a hazardous electrical situation that, if not avoided, can result in death or serious injury.



**WARNING: HOT SURFACE**

Indicates a hazardous hot surface where injury can result from contact and non-contact proximity.



**CAUTION**

Indicates a hazardous situation that, if not avoided, can result in injury.



**GROUND**

Indicates grounding.



**PROTECTIVE GROUND**

Indicates protective grounding.



**NOTICE**

Indicates the risk of damage to equipment and/or information to be noted.



**READ MANUAL**

Indicates more detailed information that should be consulted in the manual.

Copyright © 2019-2025 by Universal Robots A/S. All rights reserved.

# 3.2. General Safety Precautions

**Description**

Read the safety messages below before installing your OEM Control Box. Find more safety information in the Safety chapter of the Universal Robots User Manual.



**WARNING**

Failure to verify and validate safeguarding and functionality can result in death or serious injury.

- Ensure all risk reduction works as intended and achieves the needed risk reduction.



**WARNING**

Failure to perform a risk assessment before installation and operation can result in personnel injury or equipment damage.

- Perform a risk assessment before installation and operation.
- Read the UR User Manual and UR Service Manual.



**WARNING: ELECTRICITY**

Installing or maintaining equipment connected to a power source can lead to electric shock.

- Disconnect the equipment from the power source before installation or maintenance.



**CAUTION**

Failure to perform installation or maintenance correctly can result in equipment damage or personnel injury.

- Only qualified personnel shall perform installation, start-up, and maintenance.
- Read the UR User Manual and the UR Service Manual.



**GROUND**

Incorrect connection of the power source or ground wires can result in equipment damage or personnel injury.
Damage caused by invalid power source connection is not covered by warranty. Before starting the operation:

- Ensure that the power source wiring is correct.
- Ensure that the grounding is correct.

Copyright © 2019-2025 by Universal Robots A/S. All rights reserved.

**NOTICE**

Electrostatic Discharge (ESD) can damage sensitive components in the OEM Control Box.

- Always wear an ESD wrist strap when working with the OEM Control Box electrical interfaces.

## 3.3. OEM AC FlexTail Safety Precautions

**Description** The notes below recommend how to handle your OEM AC FlexTail.

**NOTICE**

Harsh pulling or jerking the OEM AC FlexTail cable can result in damage to equipment.

- Avoid harsh pulls or jerking motions on the OEM AC FlexTail cable.

**NOTICE**

The OEM AC FlexTail is designed for fixed installation. As such, the OEM AC FlexTail cable shall be fixed relative to the position of the OEM AC FlexTail box.

- Do not overextend the OEM AC FlexTail cable.

Copyright © 2019-2025 by Universal Robots A/S. All rights reserved.

# 4. Electrical Installation: AC

**Description**

This section describes how to connect the OEM Control Box to an AC power source.

**WARNING: ELECTRICITY**

Installing or maintaining equipment connected to a power source can lead to electric shock.

- Disconnect the equipment from the power source before installation or maintenance.

- For information on electrical specifications, see OEM Control Box Specifications

## 4.1. Required Items

You need the following items to connect the wires:

- The WAGO 831 four-pole female connector (included with the OEM Control Box).
- A flat-bladed screwdriver, blade 5.5 x 0.8 mm. For example: WAGO 210-721.
- Three wires with ferrules.

**Required items**

The illustration below shows the required items.

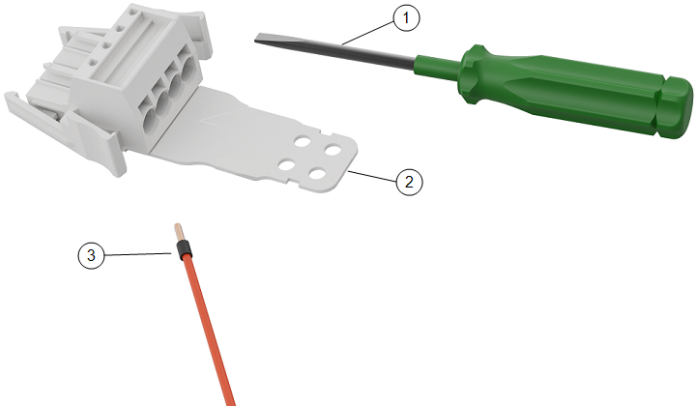


| | | | |
|---|---|---|---|
| 1 | Flat bladed tool | 2 | WAGO female connector (AC depicted) |
| 3 | Wire with ferrule | | |

Copyright © 2019-2025 by Universal Robots A/S. All rights reserved.

### 4.1.1. How to Connect Wires to the Connector

**Description**

This section describes how to connect wires to a connector with locking levers:

**To connect the wires**

1. Insert the screwdriver into a flat slot next to a connector hole.
2. Push the screwdriver until the clamp inside the hole opens. Keep the screwdriver in the slot, as shown.

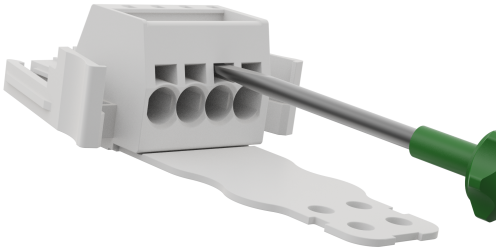

3. Insert the wire ferrule into the open hole.
4. Ensure that the wire ferrule is firmly placed, remove the screwdriver to close the hole.

## 4.2. Power Source Wiring: AC

Use the following scheme to attach wires to the connector.

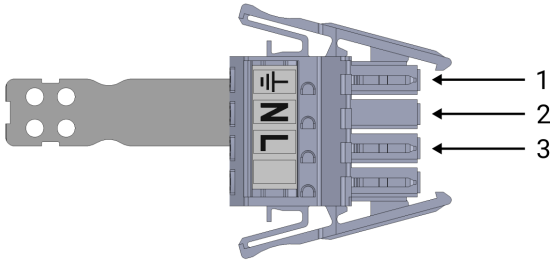


| | | | |
|---|---|---|---|
| 1 | Ground (Earth) | 2 | Neutral |
| 3 | Live (Phase) | | |

Copyright © 2019-2025 by Universal Robots A/S. All rights reserved.

To connect the OEM Control Box to the power source:

1. Connect the following wires to the connector: Neutral, Live and Ground.
2. Connect the neutral, and live wires to main power supply. Connect the ground wire to the facility ground.
3. Plug the connector into the power source socket on the OEM Control Box.

**NOTICE**

Connecting wires to poles without labels can interfere with the operation of the robot.

- Do not connect wires to poles without labels.

Copyright © 2019-2025 by Universal Robots A/S. All rights reserved.

## 4.2.1. Robot Connection

**Description**

The robot arm connector, illustrated below, is next to the power supply connector. For details on connecting the robot arm cable, refer to the Universal Robots User Manual.

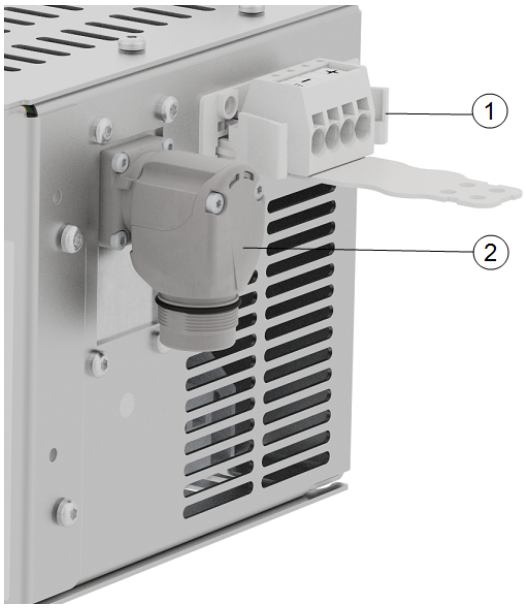


| | | | |
|---|---|---|---|
| 1 | Power connector | 2 | Robot arm connector |

Copyright © 2019-2025 by Universal Robots A/S. All rights reserved.

## 4.2.2. Circuit Breaker Installation

**Description** Use a double pole circuit breaker to protect the power input connector, as it can also be used as a switch. If a fuse is used, then a two-pole switch must be installed between the fuse and power input connector.

The following illustration shows the circuit breaker wiring scheme.

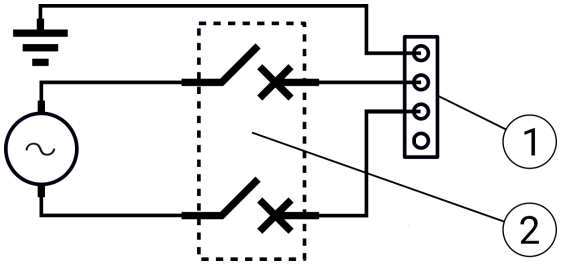


| | | | |
|---|---|---|---|
| 1 | OEM power input | 2 | Circuit breaker |

**CAUTION**

Failure to install appropriate fuses or circuit breakers can result in equipment damage or personnel injury.

- The installation shall comply with the standard IEC 60364.

Copyright © 2019-2025 by Universal Robots A/S. All rights reserved.

# 5. Electrical Installation: OEM AC FlexTail

**Description**

The main difference between the OEM Control Box and the OEM AC FlexTail is the cable extension between the Control Box and the robot arm connector, described in the following subsections.

The OEM AC FlexTail uses the same AC electrical installation described in the previous section. However additional items are required to attach the OEM AC FlexTail cable.

**WARNING: ELECTRICITY**

Installing or maintaining equipment connected to a power source can lead to electric shock.

- Disconnect the equipment from the power source before installation or maintenance.

**Required items**

You need the following items to connect the wires:

- The WAGO 831 four-pole female connector (included)
- A flat-bladed screwdriver, blade 5.5 x 0.8 mm. For example: WAGO 210-721
- Three wires with ferrule
- Four M4 screws (not included)

The illustration below shows the required items.

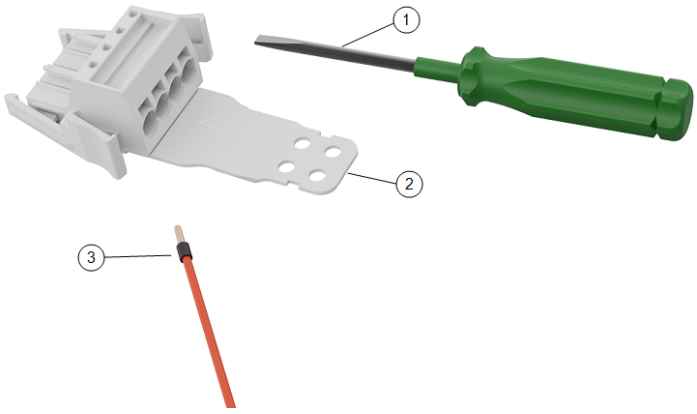


| | | | |
|---|---|---|---|
| 1 | Flat bladed tool | 2 | WAGO female connector (AC depicted) |
| 3 | Wire with ferrule | | |

Copyright © 2019-2025 by Universal Robots A/S. All rights reserved.

# 5.1. How to Connect Wires to the Connector

**Description**

This section describes how to connect wires to a connector with locking levers:

**To connect the wires**

1. Insert the screwdriver into a flat slot next to a connector hole.
2. Push the screwdriver until the clamp inside the hole opens. Keep the screwdriver in the slot, as shown.

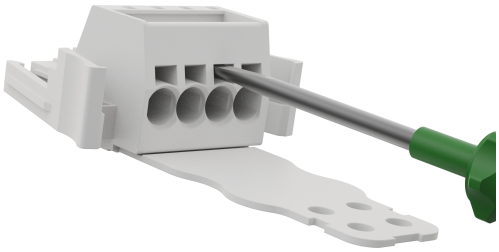

3. Insert the wire ferrule into the open hole.
4. Ensure that the wire ferrule is firmly placed, remove the screwdriver to close the hole.

# 5.2. Robot Connection for OEM AC FlexTail

**Description**

The robot arm connector, illustrated below, is next to the power supply connector.

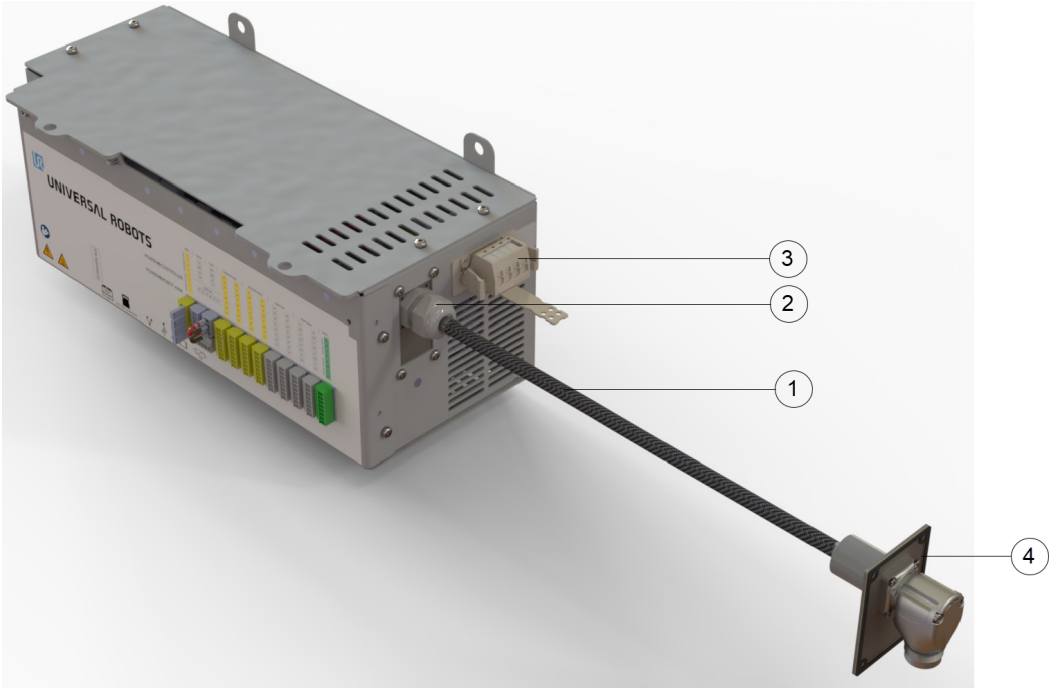


| | | | |
|---|---|---|---|
| 1 | OEM AC FlexTail cable | 2 | Cable gland |
| 3 | OEM CB Connector | 4 | Robot arm connector |

Copyright © 2019-2025 by Universal Robots A/S. All rights reserved.

Copyright © 2019-2025 by Universal Robots A/S. All rights reserved.

## 5.2.1. Circuit Breaker Installation

**Description** Use a double pole circuit breaker to protect the power input connector, as it can also be used as a switch. If a fuse is used, then a two-pole switch must be installed between the fuse and power input connector.

The following illustration shows the circuit breaker wiring scheme.

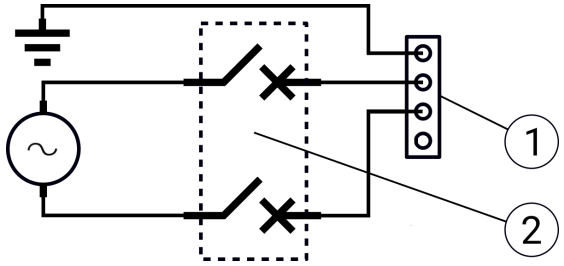


| | | | |
|---|---|---|---|
| 1 | OEM power input | 2 | Circuit breaker |

**CAUTION**

Failure to install appropriate fuses or circuit breakers can result in equipment damage or personnel injury.

- The installation shall comply with the standard IEC 60364.

Copyright © 2019-2025 by Universal Robots A/S. All rights reserved.

# 6. Electrical Installation: DC

**Description**

This section describes how to connect the OEM Control Box to an DC power source.

**WARNING: ELECTRICITY**

Installing or maintaining equipment connected to a power source can lead to electric shock.

- Disconnect the equipment from the power source before installation or maintenance.

- For information on electrical specifications, see Technical Specifications.

## 6.1. Required Items

**Components**

You need the following items to connect the wires:

- The WAGO 831 four-pole female connector (included with the OEM Control Box).
- A flat-bladed screwdriver, blade 5.5 x 0.8 mm. For example: WAGO 210-721.
- Three wires with ferrules.

The illustration below shows the required items.

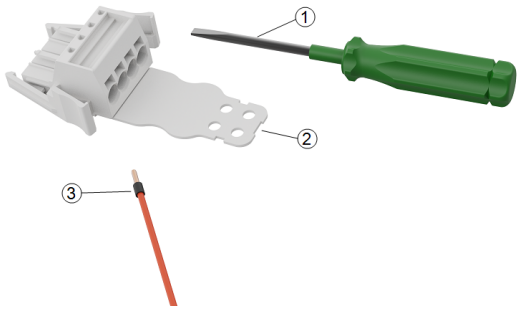


| | | | |
|---|---|---|---|
| 1 | Flat bladed tool | 2 | WAGO female connector (DC depicted) |
| 3 | Wire with ferrule | | |

Copyright © 2019-2025 by Universal Robots A/S. All rights reserved.

### 6.1.1. How to Connect Wires to the Connector

**Connect Wires**

1. Insert the screwdriver into a flat slot next to a connector hole.
2. Push the screwdriver until the clamp inside the hole opens. Keep the screwdriver in the slot, as shown.

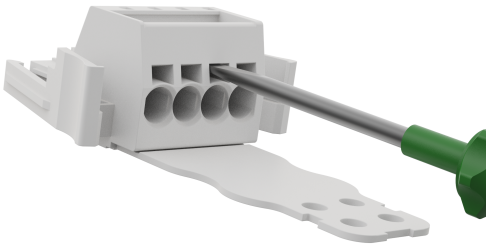

3. Insert the wire ferrule into the open hole.
4. Ensure that the wire ferrule is firmly placed, remove the screwdriver to close the hole.

## 6.2. Power Source Wiring: DC

**Description**

Use the following scheme to attach wires to the connector.

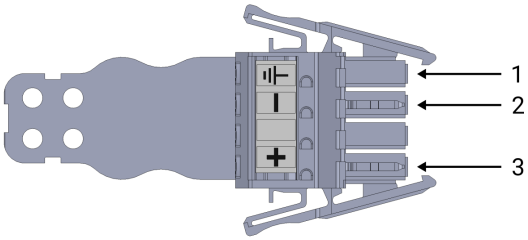


| | | | |
|---|---|---|---|
| 1 | Ground | 2 | Negative |
| 3 | Positive | | |

**NOTICE**

Reversing the DC source polarity causes permanent damage to the OEM Control Box.

Property damage caused by invalid power source connection is not covered by warranty.

- Ensure that the polarity is correct before connecting the power source.

Copyright © 2019-2025 by Universal Robots A/S. All rights reserved.

**Connect Power Source**

To connect the OEM Control Box to the power source:

1. Connect the following wires to the connector: Neutral, Line and Ground (if supported).
2. Connect the ground wire to the facility ground if the application supports such connection. Connect the negative, and positive wires to the DC source. Ensure that the polarity is correct.
3. Plug the connector into the power source socket on the OEM Control Box.

**NOTICE**

Connecting wires to poles without labels can interfere with the operation of the robot.

- Do not connect wires to poles without labels.

## Soft Start Circuit

**Description**

When the OEM Control Box is connected to a DC source, the inrush current can reach up to 400 A for 200 µs. This can cause damage to the DC source or shut down other electronics connected to it.

- Install a soft start circuit when using a DC source.

### 6.2.1. Robot Connection

**Description**

The robot arm connector, illustrated below, is next to the power supply connector. For details on connecting the robot arm cable, refer to the Universal Robots User Manual.

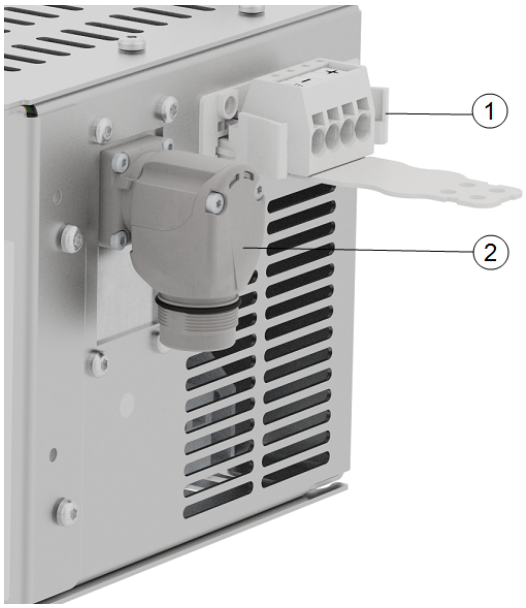


| | | | |
|---|---|---|---|
| 1 | Power connector | 2 | Robot arm connector |

Copyright © 2019-2025 by Universal Robots A/S. All rights reserved.

## 6.2.2. Circuit Breaker Installation

**Description** Use a double pole circuit breaker to protect the power input connector, as it can also be used as a switch. If a fuse is used, then a two-pole switch must be installed between the fuse and power input connector.

The following illustration shows the circuit breaker wiring scheme.

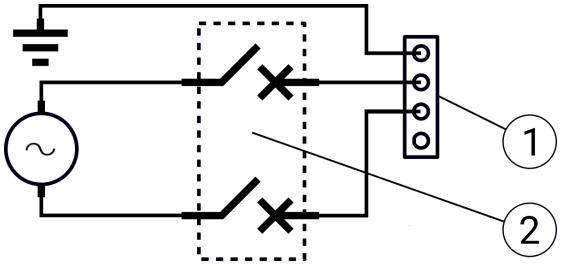


| | | | |
|---|---|---|---|
| 1 | OEM power input | 2 | Circuit breaker |

**CAUTION**

Failure to install appropriate fuses or circuit breakers can result in equipment damage or personnel injury.

- The installation shall comply with the standard IEC 60364.

Copyright © 2019-2025 by Universal Robots A/S. All rights reserved.

# 7. Mechanical Installation

## 7.1. Working Environment Guidelines

**Description**

Follow these guidelines to ensure reliable operation of the OEM Control Box:

- Keep free from dust and dirt.
- Keep away from water, solvents, and chemicals.
- Keep ambient air temperatures flowing into the OEM Control Box within 0-50°C.
- Keep the aluminum controller frame temperature within 0-65°C.

## 7.2. Mounting the OEM Control Box

**Mounting**

Use the mounting holes, shown below, to mount the OEM Control Box. Depending on version, your OEM Control Box can appear slightly different to the illustrations. Functionality is not affected by any external differences.

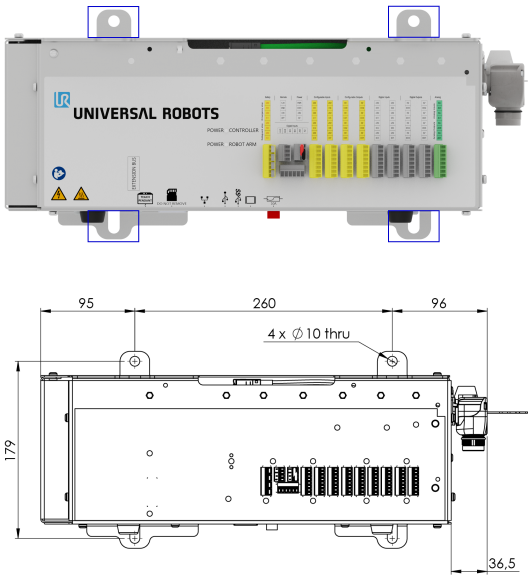


For more product dimensions, see section 9.1 Technical Specifications on page 37.
For more dimensional drawings, see section 9.4 Dimensional Drawings [mm] on page 39.

Copyright © 2019-2025 by Universal Robots A/S. All rights reserved.

Ensure there is enough space for cables and sufficient air circulation around the Control Box.

A minimum of 50 mm space around the air intake and outlets is recommended, and consideration should be made to avoid re-circulating air.

For more information about the heat dissipation, see 9.3 Control Unit Heat Dissipation on page 38. The following illustration shows the airflow.

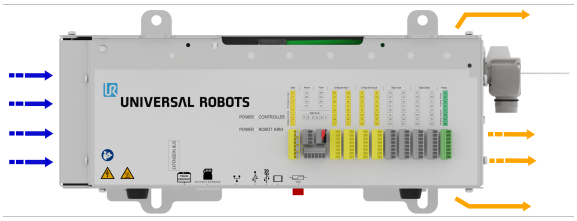


**WARNING: HOT SURFACE**

Insufficient airflow, or re-circulating warm air, can cause the OEM Control Box to overheat and shut down.

## 7.2.1. Grounding

**Description**

The OEM Control Box casing is electrically connected to the ground pin of the power source connector. Any conductive mounting surface must also be connected to the ground.

Copyright © 2019-2025 by Universal Robots A/S. All rights reserved.

# 8. Connecting External Devices

## 8.1. External Device Connection Ports

**Description**

The bottom side of the OEM Control Box contains a bracket with ports for connecting external devices. The following illustration shows the bracket.

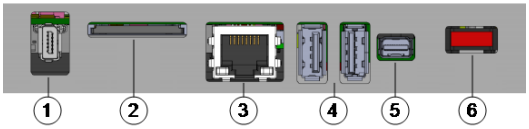


| | | | |
|---|---|---|---|
| 1 | Teach Pendant port | 2 | SD card slot |
| 3 | Ethernet port | 4 | USB ports |
| 5 | Mini Displayport | 6 | 10 A mini blade fuse |

**Ports**

| Port | Description |
|---|---|
| Teach Pendant | The port for connecting the Teach Pendant (Teach Pendant sold separately). |
| Ethernet | Connect external devices supporting MODBUS, Ethernet/IP, or PROFINET. |
| USB ports | Connect USB devices, for example a mouse, keyboard, a USB flash drive. |
| Mini Displayport | Connect a monitor. The output video stream shows the same as the display on the Teach Pendant. Supported connection types:<br>• DP (direct connection).<br>• Active DVI (using an active DP to DVI converter).<br>• Active HDMI (using an active DP to HDMI converter). |
| 10 A mini blade fuse | Connect a fuse. The fuse must be UL-marked and have a 10 A current rating. |
| SD card | The SD card is already in the SD card port. |

**NOTICE**

Removing the SD card under operation can corrupt the system. Do not remove the SD card.

### Connecting a Mouse, Keyboard, or Monitor

**Description**

Use a USB port to connect a keyboard or a mouse.
Use the Mini Displayport to connect a monitor.

Copyright © 2019-2025 by Universal Robots A/S. All rights reserved.

## 8.1.1. How to Connect a Teach Pendant

**Description**

**NOTICE**

Do not connect or disconnect the Teach Pendant while Control Box is powered on. This can cause damage to Control Box.

**NOTICE**

Excessive strain at the port on the OEM Control Box can cause damage to the Teach Pendant connector and affect the functionality of the Teach Pendant.

- Avoid pulling and/or exerting lateral forces on the Teach Pendant cable during installation.
- Avoid moving the Teach Pendant cable connector when it is connected to the Teach Pendant port.

Copyright © 2019-2025 by Universal Robots A/S. All rights reserved.

To connect a Teach Pendant:

1. Power down the Control Box. Connect the Teach Pendant cable connector to the Teach Pendant port.
2. The Teach Pendant powers on in a fault state and the Robot Arm brakes engage.

   Press **Re-Initialize** to clear the fault state.
3. When the Teach Pendant restarts, on PolyScope, exit the start-up screen.
4. On PolyScope, in the Header, tap **Installation** and select **Safety**.
5. Under Safety, tap **Hardware**.
6. In the Teach Pendant drop-down menu, select **Yes**.

   If you are prompted to use a password, type the **Safety Password** and tap **Unlock**.

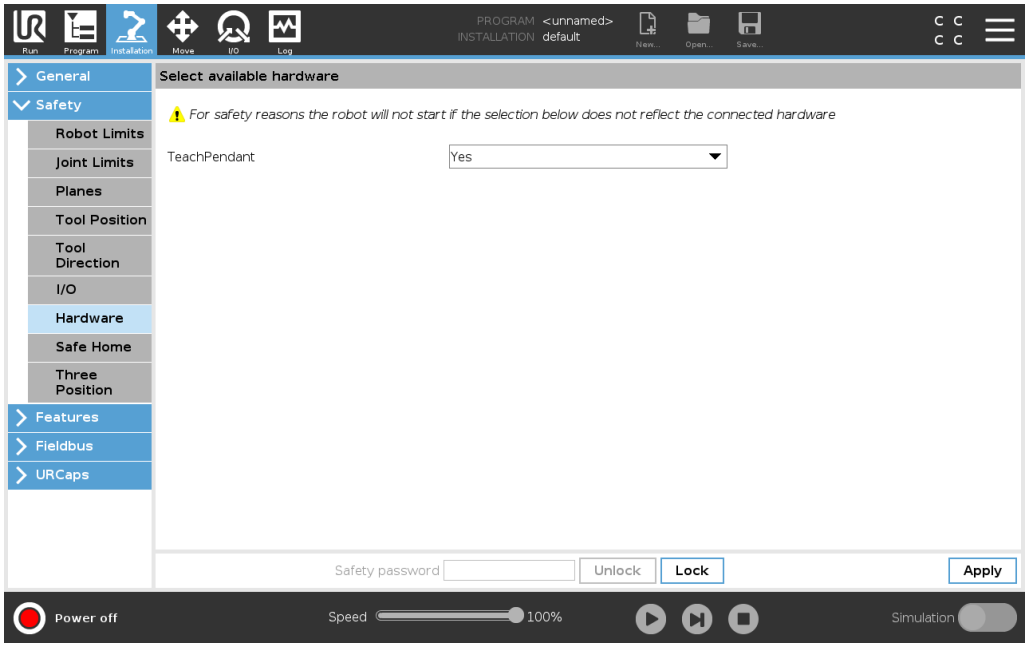


## 8.1.2. How to Use Remote Control and Local Control

To activate remote control:

1. On PolyScope, in the Header, tap the **Hamburger Menu**.
2. Select **Settings**, tap **System** and select **Remote Control**.
3. On the Remote Control screen, select **Enable** to activate Remote Control.

To activate Local Control, in the **Header**, tap the Remote Control icon and select **Local Control**.

Copyright © 2019-2025 by Universal Robots A/S. All rights reserved.

# 8.2. Connecting Devices

## 8.2.1. To Connect a 3–Position Enabling Device

**Description**

**NOTICE**

The 3PE Teach Pendant is not included with the purchase of the OEM Control Box, so enabling device functionality is not provided.
Using a UR20, or a UR30, requires an external enabling device or a 3PE Teach Pendant when programming, or teaching, within the reach of the robot application.
See ISO 10218-2.

The OEM Control Box safely supports the following enabling device configurations:

- 3PE Teach Pendant
- External Three-Position Enabling device
- External Three-Position Enabling device and 3PE Teach Pendant

The standard Teach Pendant is not supported by the UR20 and UR30 robots.

The illustration below shows how to connect a Three-Position Enabling device.

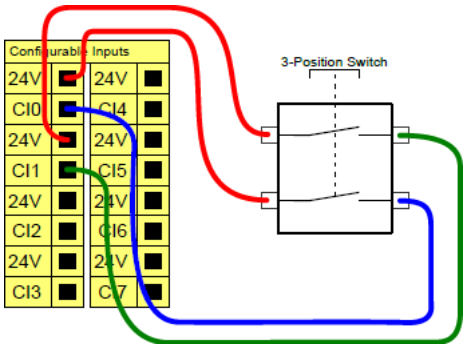


Note: The two input channels for the Three-Position Enabling Device input have a disagreement tolerance of one second.

Copyright © 2019-2025 by Universal Robots A/S. All rights reserved.

**To connect an Enabling Device to a UR Series robot**

- Connect a Three-Position Enabling Teach Pendant via the Control Box port (see 8.1 External Device Connection Ports on page 31).

or

- Connect a Three-Position Enabling Device (see 8.1 External Device Connection Ports on page 31) and an Operational Mode Switch (see 8.1 External Device Connection Ports on page 31).

For complete, in depth information about the electrical configurations, see the Electrical Interface in the UR User Manual available for download at: myur.universal-robots.com/manuals

## 8.2.2. To Connect an Operational Mode Switch

**Description** Using a Three-Position Enabling device requires the use of an Operational Mode switch.

Using a Three-Position Enabling device requires the use of an Operational Mode switch. The illustration below shows how to connect an Operational Mode switch.

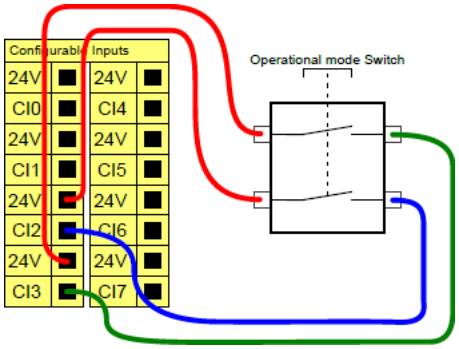


Copyright © 2019-2025 by Universal Robots A/S. All rights reserved.

# 8.3. Remote ON/OFF Control and Emergency Stop

**Description** The OEM Control Box requires a remote ON/OFF control and an emergency stop push-button. The following sections describe how to install them using the I/O ports.

## 8.3.1. Connecting the ON/OFF Control

The images below shows how the remote ON/OFF control is connected.

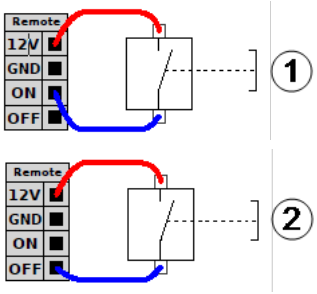


| | | | |
|---|---|---|---|
| 1 | Status: On | 2 | Status: Off |

## 8.3.2. Connecting the Remote Emergency Stop

**Description** Install an external Emergency Stop (E-stop) if the Teach Pendant with the default Emergency Stop is not connected to the Control Box.

The following illustration shows the minimum required Emergency Stop installation.

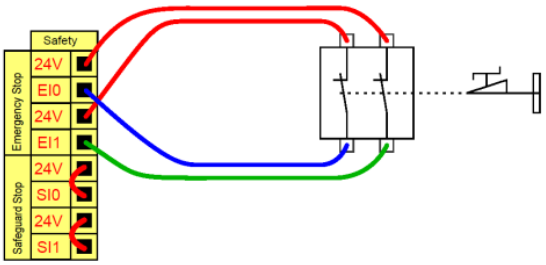


Copyright © 2019-2025 by Universal Robots A/S. All rights reserved.

# 9. OEM Control Box Specifications

## 9.1. Technical Specifications

**Specifications**

| | |
|---|---|
| OEM Control Box size (W x H x D) | 451 mm x 150 mm x 168 mm |
| *OEM AC FlexTail size (W x H x D) | 475 mm x 150 mm x 168 mm |
| *OEM AC FlexTail cable extension bend radius | 25 mm |
| OEM Control Box weight | AC: 4.7 kg (10.4 lbs) |
| | DC: 4.3 kg (9.5 lbs) |
| *OEM AC FlexTail weight | AC: 5.2 kg (11.5 lbs) |
| OEM Control Box I/O ports | 16 digital in, 16 digital out, 2 analog in, 2 analog out |
| OEM Control Box I/O power supply | 24 V, max 2 A |

* The dimensions differ slightly for the OEM AC FlexTail. There is no difference in functionality between the two types of OEM Contol Box.

## 9.2. Electrical Specifications

**AC Variant**

| Property | Min | Typical | Max | Unit |
|---|---|---|---|---|
| Input Voltage | 90 | 100 - 240 | 264 | VAC |
| External Mains Fuse (@ 90-200V) | 15 | - | 16 | A |
| External Mains Fuse (@ 200-265V) | 8 | - | 16 | A |
| Input Frequency | 47 | - | 440 | Hz |
| Stand-by Power | - | - | <1.5 | W |
| Standby voltage | | | 5 | V |

**DC Variant**

| Property | Min | Typical | Max | Unit |
|---|---|---|---|---|
| Input Voltage | 19 | 24 - 48 | 72 | VDC |
| Stand-by Power | - | - | <7 | W |
| External fuse | - | - | 100 | A |
| Inrush current (200) | - | - | 400 | A |

Copyright © 2019-2025 by Universal Robots A/S. All rights reserved.

# 9.3. Control Unit Heat Dissipation

| Robot Type | Max. Heat Dissipation |
|---|---|
| UR20 & UR30 | 350 W |
| UR16e & UR10e | 130 W |
| UR5e & UR3e | 100 W |
| UR15 | 240 W |
| UR8L | 210 W |
| UR18 | 180 W |

Copyright © 2019-2025 by Universal Robots A/S. All rights reserved.

# 9.4. Dimensional Drawings [mm]

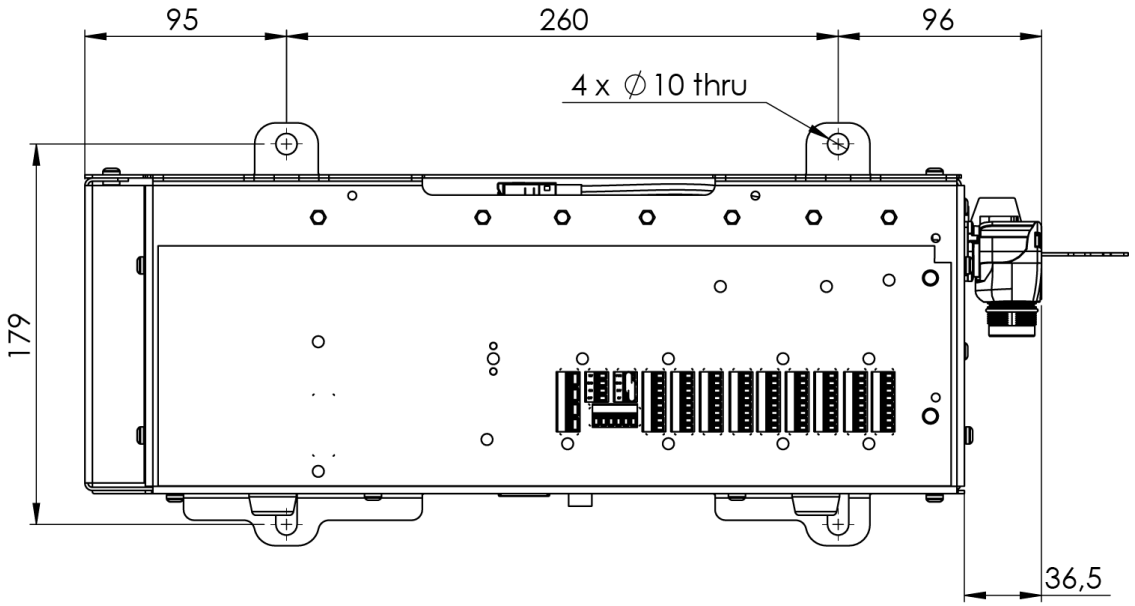


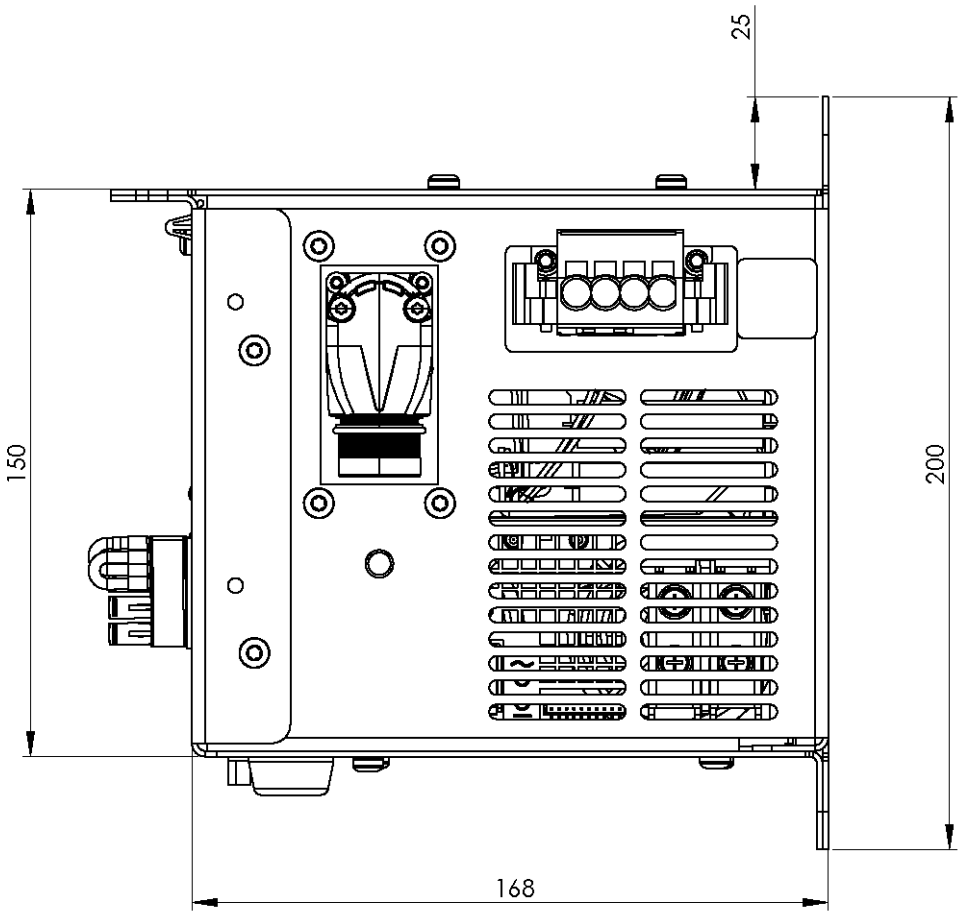


Copyright © 2019-2025 by Universal Robots A/S. All rights reserved.

# 9.5. Dimensional Drawings [mm] OEM AC FlexTail

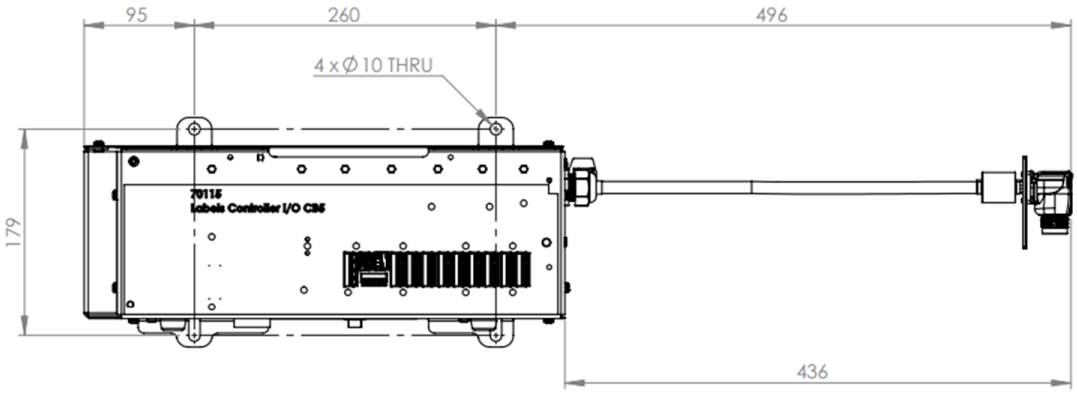


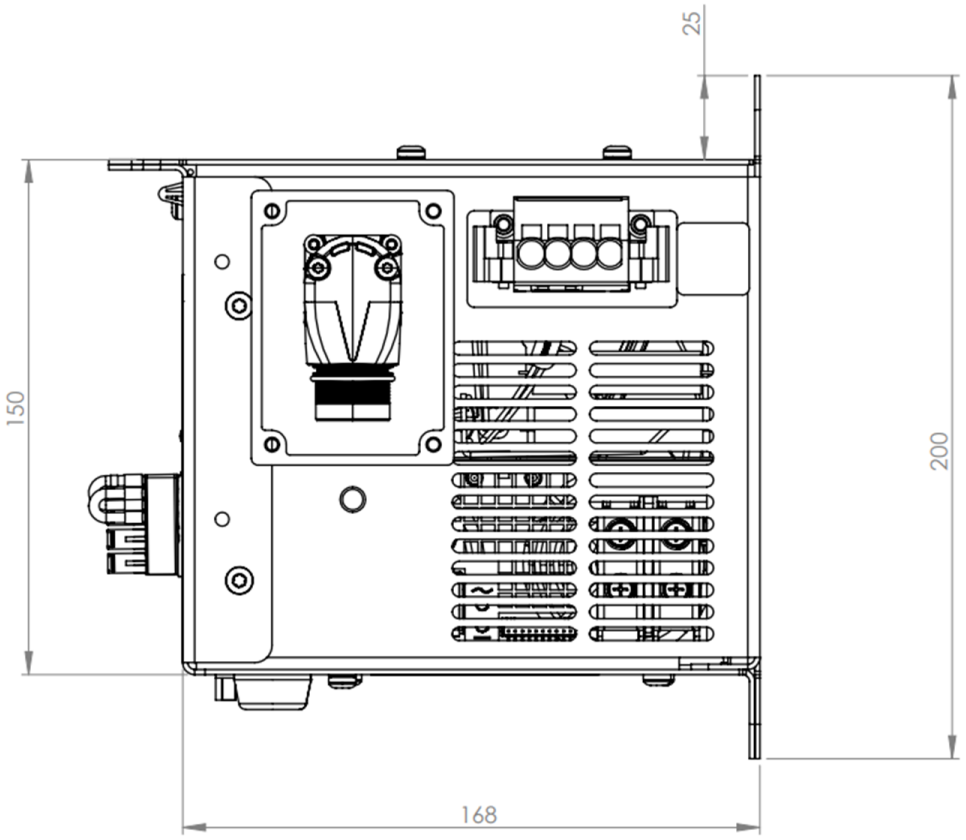


Copyright © 2019-2025 by Universal Robots A/S. All rights reserved.

# 10. Troubleshooting

## 10.1. OEM Control Box AC variant

OEM Control Box AC
&
OEM AC FlexTail

| Symptom | Possible Solution |
|---|---|
| Control Box does not turn on. | Check that the power source is wired correctly (see 1 Power Source Wiring: AC on page 1). |
| Control Box turns on for a few seconds then shuts down. | Pressing the Power ON button for more than 5 seconds shuts the Control Box down. Press the button for 1-2 seconds only. |
| Robot performance is unstable. | • Check the input voltage is within specifications (see 9 OEM Control Box Specifications on page 37 1.1 Technical Specifications on page 1)<br>• Check grounding (avoid ground-loops or loose screws). |

## 10.2. OEM Control Box DC variant

OEM Control Box DC

| Symptom | Possible Solution |
|---|---|
| Control Box does not turn on. | • Check that the power source is wired correctly (see 1 Power Source Wiring: DC on page 1).<br>• Ensure the DC source connection polarity is correct. Reverse polarity causes permanent damage to the OEM Control Box. |
| Control Box turns on for a few seconds then shuts down. | Pressing the Power ON button for more than 5 seconds shuts the Control Box down.<br>Press the button for 1-2 seconds only. |
| Control Box does not turn on or the robot performance is unstable. | • Check the DC input is within specifications in 1.1 Technical Specifications on page 1.<br>• Check the DC supply has enough charge to supply the initial current to the system. |

For complete, in depth information about the electrical configurations, see the Electrical Interface in the UR User Manual available for download at: myur.universal-robots.com/manuals

Copyright © 2019-2025 by Universal Robots A/S. All rights reserved.

# 11. Robot Arm Cleaning and Inspection

**Description**

As part of regular maintenance the robot arm can be cleaned, in accordance with the recommendations in this manual and local requirements.

**Cleaning Methods**

To address the dust, dirt, or oil on the robot arm and/or Teach Pendant, simply use a cloth alongside one of the cleaning agents provided below.

**Surface Preparation**: Before applying the below solutions, surfaces may need to be prepared by removing any loose dirt or debris.

**Cleaning agents**:

- Water
- 70% Isopropyl alcohol
- 10% Ethanol alcohol
- 10% Naphtha (Use to remove grease.)

**Application**: The solution is typically applied to the surface that needs cleaning using a spray bottle, brush, sponge, or cloth. It can be applied directly or diluted further depending on the level of contamination and the type of surface being cleaned.
**Agitation**: For stubborn stains or heavily soiled areas, the solution may be agitated using a brush, scrubber, or other mechanical means to help loosen the contaminants.
**Dwell Time**: If necessary, the solution is allowed to dwell on the surface for a up to 5 minutes to penetrate and dissolve the contaminants effectively.
**Rinsing**: After the dwell time, the surface is typically rinsed thoroughly with water to remove the dissolved contaminants and any remaining cleaning agent residue. It's essential to ensure thorough rinsing to prevent any residue from causing damage or posing a safety hazard.
**Drying**: Finally, the cleaned surface may be left to air dry or dried using towels.



**WARNING**

DO NOT USE BLEACH in any diluted cleaning solution.

Copyright © 2019-2025 by Universal Robots A/S. All rights reserved.



**WARNING**

Grease is an irritant and can cause an allergic reaction. Contact, inhalation or ingestion can cause illness or injury. To prevent illness or injury, adhere to the following:

- PREPARATION:
  - Ensure that the area is well ventilated.
  - Have no food or beverages around the robot and cleaning agents.
  - Ensure that an eye wash station is nearby.
  - Gather the required PPE (gloves, eye protection)
- WEAR :
  - Protective gloves: Oil resistant gloves (Nitrile) impermeable and resistant to product.
  - Eye protection is recommended to prevent accidental contact of grease with eyes.
- DO NOT INGEST.
- In the event of
  - contact with skin, wash with water and a mild cleaning agent
  - a skin reaction, get medical attention
  - contact with the eyes, use an eyewash station, get medical attention.
  - inhalation of vapors or ingestion of grease, get medical attention
- After grease work
  - clean contaminated work surfaces.
  - dispose responsibly of any used rags or paper used for cleaning.
- Contact with children and animals is prohibited.

Copyright © 2019-2025 by Universal Robots A/S. All rights reserved.

**Robot Arm Inspection Plan**

The table below is a checklist of the type of inspections recommended by Universal Robots. Perform inspections regularly as advised in the table. Any referenced parts found to be in an unacceptable state must be rectified or replaced.

| Inspection action type | | | Timeframe | | |
|---|---|---|---|---|---|
| | | | Monthly | Biannually | Annually |
| 1 | Check flat rings | V | | ✗ | |
| 2 | Check robot cable | V | | ✗ | |
| 3 | Check robot cable connection | V | | ✗ | |
| 4 | Check Robot Arm mounting bolts * | F | ✗ | | |
| 5 | Check Tool mounting bolts * | F | ✗ | | |
| 6 | Round Sling | F | | | ✗ |

**Robot Arm Inspection Plan**

**NOTICE**

Using compressed air to clean the robot arm can damage the robot arm components.

- Never use compressed air to clean the robot arm.

**Robot Arm Inspection Plan**

1. Move the Robot Arm to ZERO position, if possible.
2. Turn off and disconnect the power cable from Control Box.
3. Inspect the cable between Control Box and Robot Arm for any damage.
4. Check the base mounting bolts are properly tightened.
5. Check the tool flange bolts are properly tightened.
6. Inspect the flat rings for wear and damage.
   - Replace the flat rings if they are worn out or damaged.

**NOTICE**

If any damage is observed on a robot within the warranty period, contact the distributor where the robot was purchased.

Copyright © 2019-2025 by Universal Robots A/S. All rights reserved.

**Inspection**

1. Unmount any tool/s or attachment/s or set the TCP/Payload/CoG according to tool specifications.
2. To move the robot arm in Freedrive:
   - On a 3PE Teach Pendant, rapidly light-press, release, light-press again and keep holding the 3PE button in this position.

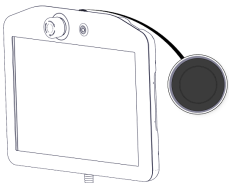

Power button

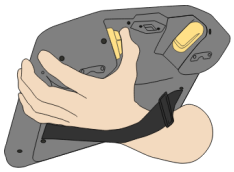

3PE button

3. Pull/Push the robot to a horizontally elongated position and release.

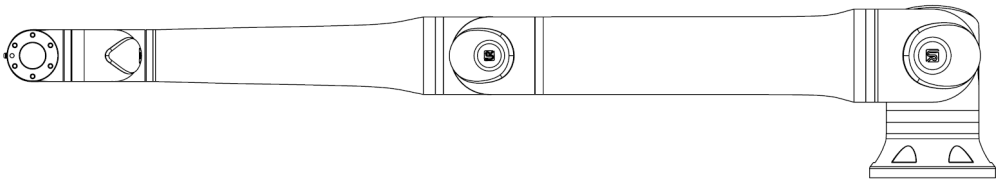

4. Verify the robot arm can maintain the position without support and without activating Freedrive.

Copyright © 2019-2025 by Universal Robots A/S. All rights reserved.

# 12. Cable Strain Relief Bracket

**Description**

You can prevent cable strain in your OEM Control Box by installing a cable strain relief bracket. The bracket provides cable strain relief when the Teach Pendant is in use, under normal operation.

## 12.1. OEM Control Box AC

**To install and use the cable strain relief bracket**

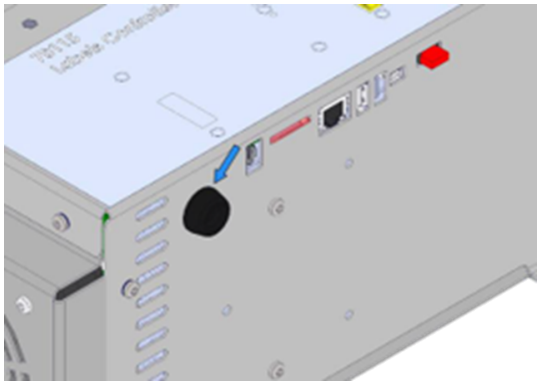

1. Remove grommet

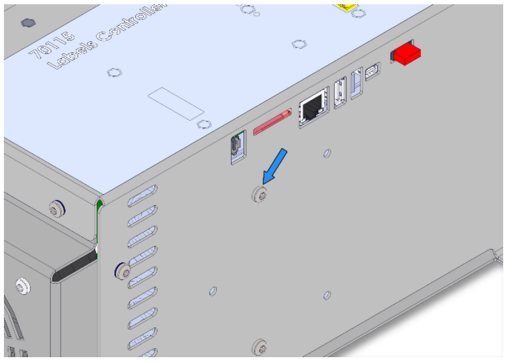

2. Remove screw

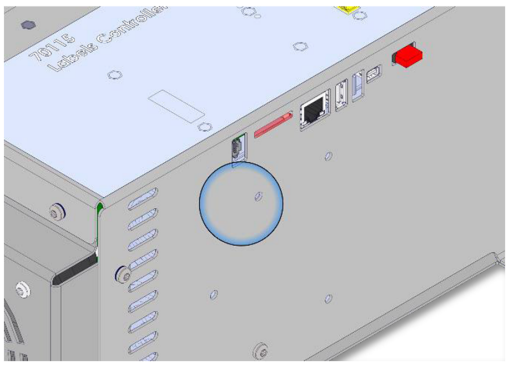

3. Clean area with alcohol solution and allow the alcohol to evaporate

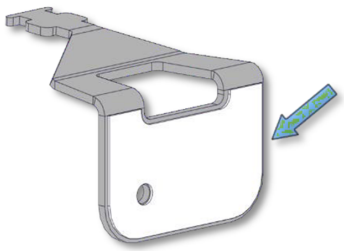

4. Remove protective film from adhesive patch

Copyright © 2019-2025 by Universal Robots A/S. All rights reserved.

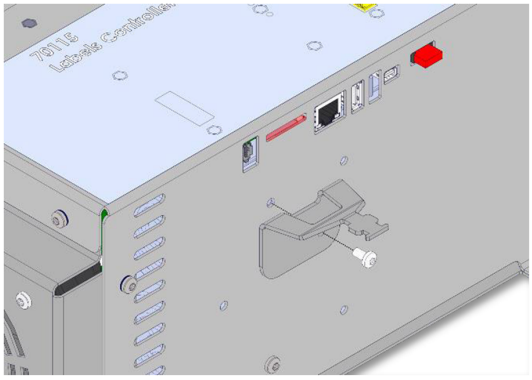

5. Align the bracket using the included screw

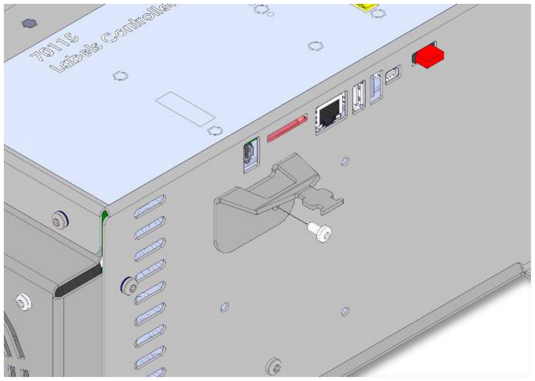

6. Tighten the included screw (Torque 1Nm)

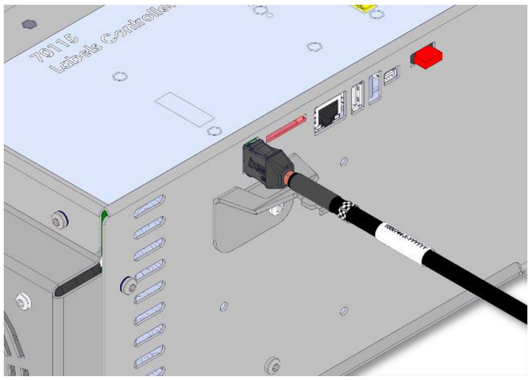

7. Connect TP cable

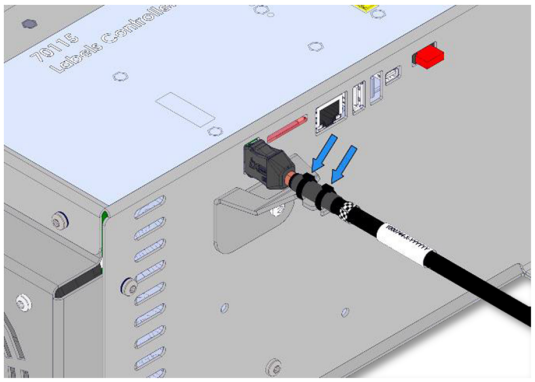

8. Secure the TP cable with the included zip ties

Copyright © 2019-2025 by Universal Robots A/S. All rights reserved.

# 12.2. OEM Control Box DC

**To install and use the cable strain relief bracket**

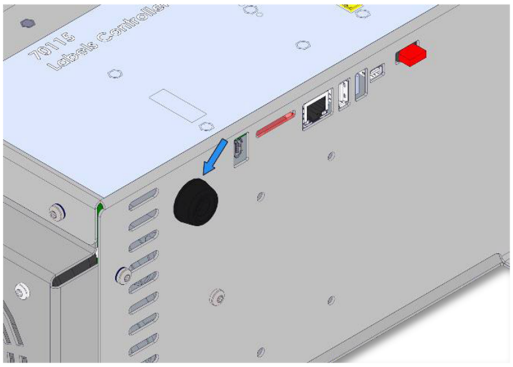

1. Remove grommet

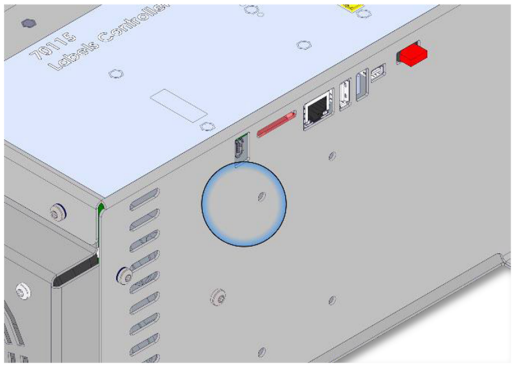

2. Clean area with alcohol solution and allow the alcohol to evaporate.

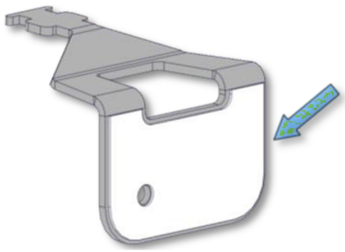

3. Remove protective film from adhesive patch

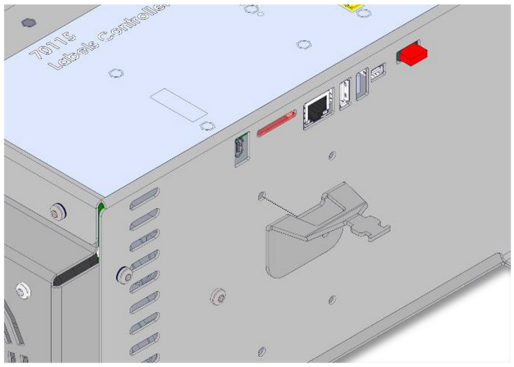

4. Align the bracket using the screw hole

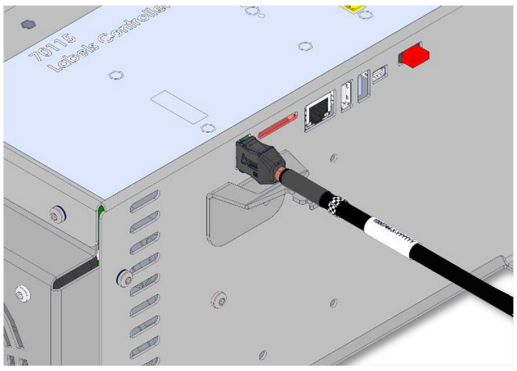

5. Connect TP cable

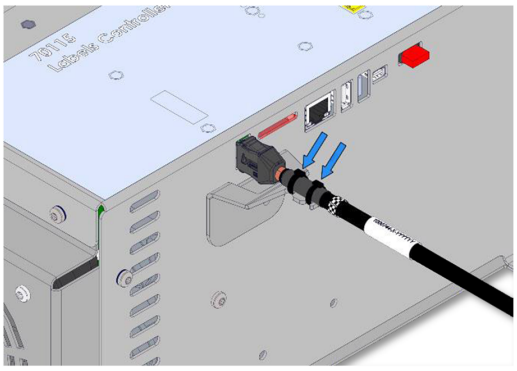

6. Secure the TP cable with the included zip ties

Copyright © 2019-2025 by Universal Robots A/S. All rights reserved.

# 13. Certifications

**Description**

This section contains information about certificates and declarations valid for Universal Robots robots with OEM controllers.

**Shipping materials**

As stated by our suppliers, Universal Robots robots shipping materials comply with the ISPM-15 requirements for producing wood packaging material and are marked accordingly.

**Certification of quality**

Universal Robots robots undergo continuous internal testing and end-of-line test procedures. UR testing processes undergo continuous review and improvement.

**Declarations according to EU directives**

Universal Robots robots are certified according to the following directives.

- **2006/42/EC – Machinery Directive (MD)**
  According to the Machinery Directive 2006/42/EC, Universal Robots robots are partly completed machinery, and do not have a CE mark on them.
- **2012/19/EU – Waste of Electrical and Electronic Equipment (WEEE)**
  For information on disposal of electrical and electronic equipment waste, refer to chapter 7, Disposal and Environment in the robot user manual.

Copyright © 2019-2025 by Universal Robots A/S. All rights reserved.

# 13.1. Declarations and Certificates (original)

## 13.1.1. Declaration of Incorporation (original EN)

UNIVERSAL ROBOTS

**EU Declaration of Incorporation (DOI)** *(in accordance with 2006/42/EC Annex II B)* *original EN*

| **Manufacturer:** | **Person Authorized to Compile the Technical File:** |
|---|---|
| **Universal Robots A/S**<br>Energivej 51<br>DK-5260 Odense S Denmark | **David Brandt**<br>Technology Officer, R&D<br>Universal Robots A/S, Energivej 51, DK-5260 Odense S |

**Description and Identification of the Partly-Completed Machine(s):**

| | |
|---|---|
| **Product and Function:** | **Industrial robot** *multi-purpose, multi-axis manipulator with an OEM control box & with or without teach pendant (with or without 3PE).* Function is determined by the completed machine (robot application or cell with end-effector, intended use and application program).<br>Below cited documents and this declaration include:<br>*Effective October 2020: Teach Pendants with 3-Position Enabling (3PE TP) & standard Teach Pendants.*<br>*Effective May 2021: UR10e specification improvement to 12.5kg maximum payload.* |
| **Model:** | **e-Series robots with either AC or DC OEM controllers, including the following:**<br>**UR3e OEM AC, UR5e OEM AC, UR7e OEM DC, UR10e OEM AC, UR12e OEM AC, UR16e OEM AC**<br>**UR3e OEM DC, UR5e OEM DC, UR7e OEM DC, UR10e OEM DC, UR12e OEM DC, UR16e OEM DC** |
| **Serial Number:** | **Starting XY 24 5 0 00000 and higher**<br>*Factory Variant year e-Series — Sequential numbering, restarting at 0 each year*<br>*3 = UR3e, 5 = UR5e, 7 = UR7e, 0 = UR10e, 1 = UR12e, 2 = UR10e (12kg payload), 6 = UR16e* |
| **Incorporation:** | **Universal Robots e-Series OEM robots (UR3e, UR5e, UR7e, UR10e, UR12e and UR16e) shall only be put into service upon being integrated into a final complete machine (robot application or robot cell), which conforms with the provisions of the Machinery Directive & other applicable Directives.** |

**It is declared that the above products fulfil, for what is supplied, the following directives as detailed below:**
When this partly completed machine is integrated and becomes a complete machine, the integrator is responsible for the completed machine fulfilling all applicable Directives, applying the CE mark and providing the Declaration of Conformity (DOC).

| | |
|---|---|
| **I. Machinery Directive 2006/42/EC** | **The following essential requirements have been fulfilled:**<br>1.1.2, 1.1.3, 1.1.5, 1.2.4.3, 1.2.5, 1.2.6, 1.3.2, 1.3.4, 1.3.8.1, 1.3.9, 1.5.1, 1.5.5, 1.5.10, 1.7.2, 1.7.4, 4.1.2.3, 4.1.3, Annex VI.<br>It is declared that the relevant technical documentation has been compiled in accordance with Part B of Annex VII of the Machinery Directive. |
| **II. Low-voltage Directive 2014/35/EU** | Reference the LVD and the harmonized standards used below. |

**Reference to the harmonized standards used, as referred to in Article 7(2) of the MD & LV Directives and Article 6 of the EMC Directive:**

| | | |
|---|---|---|
| **(I)** EN ISO 13732-1:2008, *as applicable* | **(I) (II)** EN 60204-1:2018, *as applicable* | **(II)** EN 60664-1:2007<br>**(II)** EN 61140:2002/ A1:2006 |

**Reference to Other Technical Standards and Specifications Used:**

| | | |
|---|---|---|
| **(I)** ISO 9409-1:2004 | **(II)** EN 60320-1:2021 | IEC 61784-3:2010 *[SIL2]* |

The manufacturer, or his authorised representative, shall transmit relevant information about the partly completed machinery in response to a reasoned request by the national authorities.

Approval of full quality assurance system by the notified body Bureau Veritas: ISO 9001 certificate #DK015892 and ISO 45001 certificate #DK015891.

Odense Denmark, 2 April 2025

*Roberta Nelson Shea, Global Technical Compliance Officer*

Universal Robots A/S, Energivej 51, DK-5260 Odense S, Denmark
CVR-nr. 29 13 80 60
Phone +45 8993 8989
Fax +45 3879 8989
info@universal-robots.com
www.universal-robots.com

Copyright © 2019-2025 by Universal Robots A/S. All rights reserved.

Software Name: PolyScope 5
Software Version: 5.26
Document Version: 10.17.215

716-197-00


716-197-00