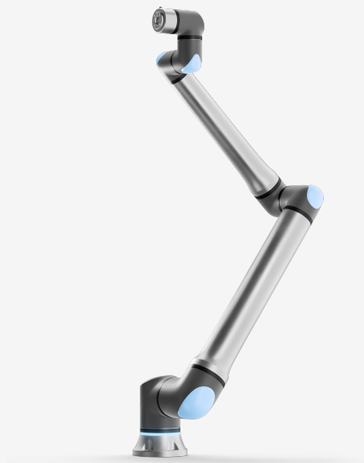

UNIVERSAL ROBOTS
A Teradyne Robotics Company

UR8 Long

Technical specification

Long Reach. Lean Footprint. No compromise.

The UR8 Long offers a 1750 mm reach and an 8 kg payload in a compact, lightweight design. Ideal for welding, pick & place and quality inspection, it excels in applications requiring precise linear motion and high-speed acceleration. With advanced joint architecture and accurate torque control, it's the perfect cobot for tasks demanding both reach and precision.

Today, more than 100,000 UR collaborative industrial robots have been delivered to customers across industries and around the world. The newest series of UR cobots brings unparalleled performance, adaptability and user experience.

Updated November 2026

Copyright © 2026 by Universal Robots A/S. All rights reserved.

UR8 Long

General specification

Payload	8 kg / 17.6 lbs 10 kg / 22 lbs with boundary conditions according to the manual.
Reach	1750 mm / 68.9 in
Degrees of freedom	6 rotating joints
Programming	12-inch touchscreen with PolyScope graphical user interface
Power consumption	
Maximum power	615 W
Operating temperature range	Ambient temperature: 0-50 ˚C / 32-122 ˚F
Safety functions	23 configurable safety functions
In compliance with	EN ISO 13849-1 (PLd Category 3), EN ISO 10218-1 and UL 1740
Joint architecture	2-1-3

UR8 Long Robot Arm

Performance

Force sensing, tool flange/torque sensor	**Force, x-y-z**	**Torque, x-y-z**
Range	± 150.0 N	± 10.0 Nm
Precision	± 7.5 N	± 0.2 Nm
Accuracy	± 8.3 N	± 0.5 Nm

Movement

Maximum TCP speed	5 m/s	
Pose repeatability per ISO 9283	± 0.08 mm	
Axis movement	**Working range**	**Maximum speed**
Base	± 360°	± 180˚/s
Shoulder	± 360°	± 180˚/s
Elbow	± 360°	± 240˚/s
Wrist 1	± 360°	± 300˚/s
Wrist 2	± 360°	± 300˚/s
Wrist 3	± 360°	± 300˚/s

Features

IP Classification	IP65
Noise	< 67 dB(A)
Status identification	Light ring at robot base
Arm mounting	Any orientation
I/O Ports at tool flange	
Digital In	2
Digital Out	2
Analog In	2 or 1 x RS485
Power supply voltage	12/24 V
Power supply	2 A (Dual pin), 1 A (Single pin)

Physical

Footprint	Ø204 mm
Materials	Aluminum, plastic, steel
Tool flange	EN ISO 9409-1-50-4-M6
Connector type	M8 8-pin female
Cable length (robot arm)	6 m / 236 in
Weight without cable	44.7 kg / 98.5 lb
Humidity	≤ 90% RH (non-condensing)

Contact

Universal Robots A/S
Energivej 51
5260 Odense
Denmark

+45 89 93 89 89
sales@universal-robots.com
universal-robots.com

3-Position Enabling Teach Pendant

Features

IP classification	IP54
Humidity	≤ 90% RH (non-condensing)
Display resolution	1280 x 800 pixels

Physical

Materials	Plastic
Teach pendant size (W x H x D)	300 mm x 231 mm x 50 mm / 11.8 in x 9.1 in x 1.97 in
Weight	1.8 kg / 3.968 lbs including 1 m of teach pendant cable
Cable length	4.5 m / 177.17 in

Control Box

Features

IP classification	IP44
Humidity	≤ 90% RH (non-condensing)
I/O Ports	
Digital In	16
Digital Out	16
Analog In	2
Analog Out	2
Quadrature digital inputs	4
I/O Power Supply	24 V, 2 A
Industrial protocols	Modbus TCP (Client/Server) Ethernet/IP Adapter PROFINET device, PROFIsafe ROS/ROS2
Hardware interfaces	Ethernet 1 Gb/s USB 2.0 USB 3.0 Mini DisplayPort Injection Moulding Machine Interface (SPI AN-146 & Euromap-67)*
Power Source	100-240 VAC, 50-60 Hz

**Only valid for OEM version.*

Physical

Control Box Size (W x H x D)	460 mm x 449 mm x 254 mm / 18.2 in x 17.6 in x 10 in
Weight	12 kg / 26.5 lbs
Materials	Powder coated steel

The control box is also available in an OEM version.

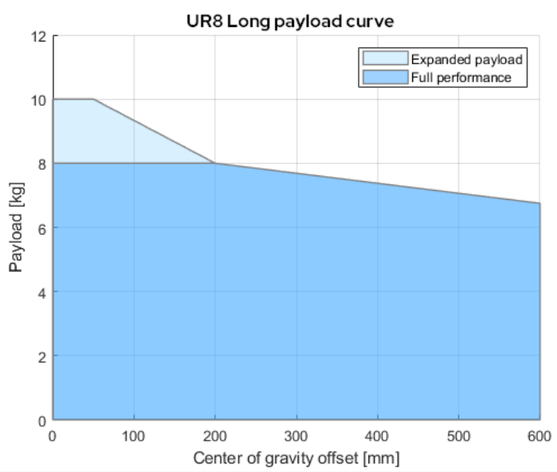

Interface for UR8 Long base flange

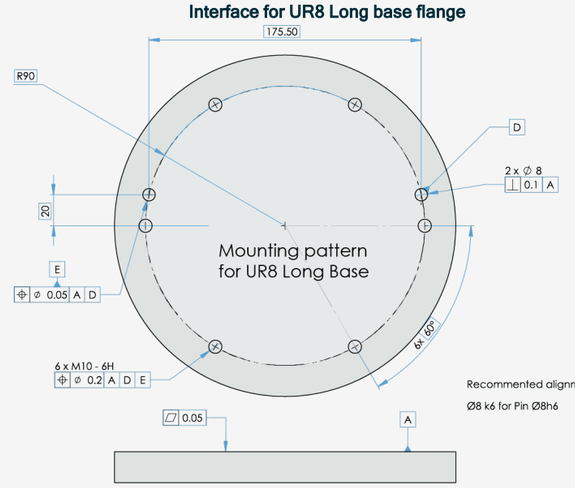

Recommented alignment pin hole:
Ø8 k6 for Pin Ø8h6

Tool flange for UR8 Long

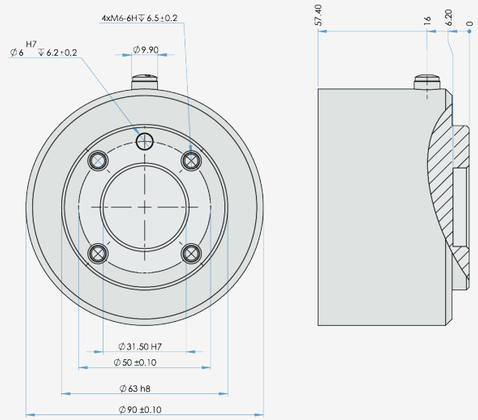

Dimensions and reach UR8 Long

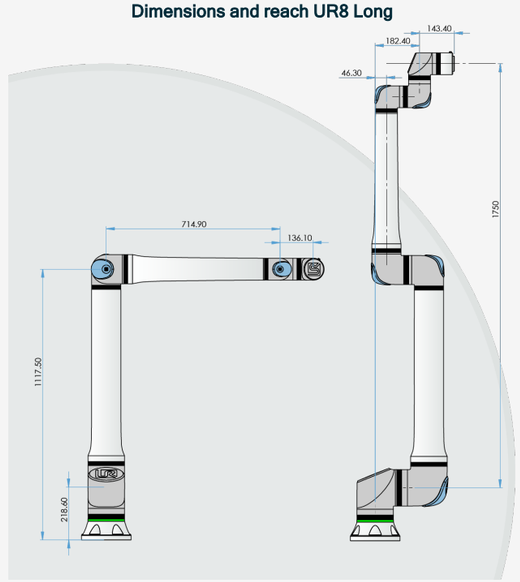

November 2026

UNLESS OTHERWISE SPECIFIED:
Dimensions are in millimeters. Tolerance ± 0,1 mm ± 0,5˚