UNIVERSAL ROBOTS
A Teradyne Robotics Company

TP7

Generation 7 · g-Series 01

Technical datasheet

Updated October 2026

Copyright © 2026 by Universal Robots A/S. All rights reserved.

TP7

General specification	
Screen	Size: 11.6", resolution: 1920x1080p, aspect ratio: 16:9
Communication	USB 2.0 Type A
Buttons	2x user-configurable smart buttons
E-stop	EN ISO 10218-1:2025
3PE enabling device	EN ISO 10218-1:2025
Features	2x smart buttons, virtual joystick, multi-gesture touch
Environment	
Operating temperature	0-50 °C
Humidity	≤ 90% RH (non-condensing)
Pollution degree	2
Protection	
IP classification	IP54
Physical	
Teach pendant size (W x H x D)	302 mm x 241 mm x 25 mm
Materials	Aluminium, PC/ASA plastic
Weight	1.415 kg / 3.12 lb, incl. 1 m Teach Pendant cable

Compatibility

Controller	CB7 Core CB7 Core Compact CB7 Core Compact 0.55m
Software	PolyScope X

Teach Pendant Cable

Description	
Teach Pendant port	ethTP (Ethernet)
Connection	TP7 to CB7 via dedicated Teach Pendant port
Cable length (standard)	5 m, 12 m

Contact

UR HQ address	Teradyne Robotics A/S Energivej 51 5260 Odense, Denmark
UR HQ phone	+45 89 93 89 89
UR email	sales@universal-robots.com
UR website	universal-robots.com

UNIVERSAL ROBOTS
A Teradyne Robotics Company

TP7

Generation 7 · g-Series 01

Technical datasheet

Updated October 2026

Copyright © 2026 by Universal Robots A/S. All rights reserved.

TP7 dimensional diagram

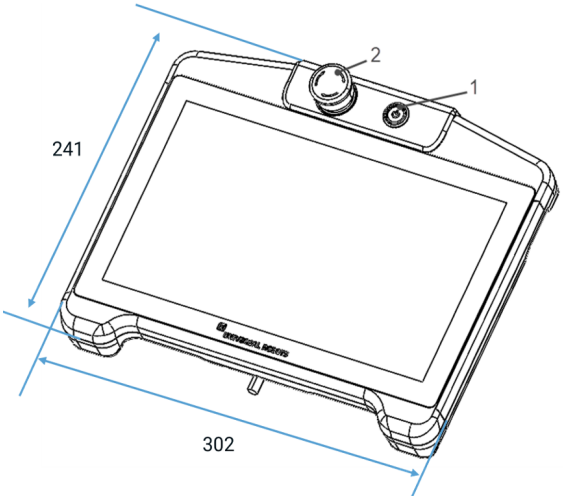

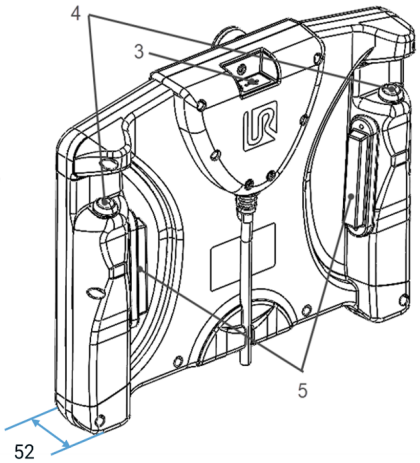

1. Power switch
2. Emergency stop
3. USB port
4. Configurable smart buttons
5. 3PE devices

TP7 gripping positions

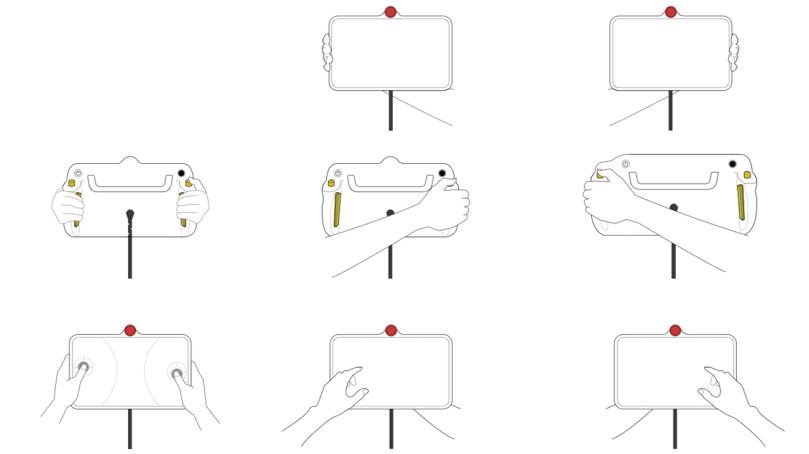

Dual hand grip | Right hand grip | Left hand grip

Contact

UR HQ address	Teradyne Robotics A/S Energivej 51 5260 Odense, Denmark
UR HQ phone	+45 89 93 89 89
UR email	sales@universal-robots.com
UR website	universal-robots.com