UNIVERSAL ROBOTS
A Teradyne Robotics Company

UR12e-1300

Generation 7 · e-Series

Technical Data Sheet

Updated November 2026

Copyright © 2026 by Universal Robots A/S. All rights reserved.

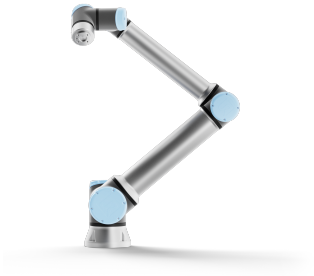

Robot Arm Specification

Maximum Payload	12.5 kg / 27.6 lb
Reach	1300 mm / 51.18 in
Footprint	Ø190 mm / Ø7.48 in
Weight including cable	33.5 kg / 73.9 lb
Degrees of freedom	6 rotating joints
Joint architecture	2-1-3
Power Consumption	
Maximum power consumption	615 W
Average power consumption	350 W
Noise level	< 60 dB(A)
Control loop frequency	500 Hz
Safety functions	23 configurable safety functions
In compliance with	TÜV Rheinland EN ISO 13849-1 TÜV Rheinland EN ISO 10218-1 RoHS See Declaration of Incorporation
Robot materials	Aluminium, plastic, steel
Physical	
Tool flange	ISO 9409-1-50-4-M6

Tool flange specification

Force-torque sensing at tool flange	**Force, x-y-z**	**Torque, x-y-z**
Range	± 100.0 N	± 10.0 Nm
Precision	± 5.0 N	± 0.2 Nm
Accuracy	± 5.5 N	± 0.5 Nm

Electrical interfaces at tool flange	
Connector M8 I/O	
Connector type	M8 8-pin female
Digital in	2
Digital out	2
Analog in	2 or 1 x RS-485
Power supply voltage	12 or 24 Vdc
Power supply	2 A (dual pin), 1 A (single pin)

Motion

Maximum TCP speed	4 m/s
Pose repeatability per ISO 9283	± 0.05 mm

Axis movement	**Working range**	**Maximum speed**
Base	± 360°	± 120°/s
Shoulder	± 360°	± 120°/s
Elbow	± 360°	± 180°/s
Wrist 1	± 360°	± 180°/s
Wrist 2	± 360°	± 180°/s
Wrist 3	± 360°	± 180°/s

Operating environment

Operating temperature range	Ambient temperature 0-50 °C / 32-122 °F Reduced performance from 35 °C and up.
Humidity	≤ 90% RH (non-condensing)

Features

IP Classification	IP54
Integrated force-torque sensor at tool flange	yes
Arm mounting	Any orientation

Compatibility

Software	PolyScope X
Controller	CB7 Core CB7 Core Compact CB7 Core Compact 0.55m
Teach Pendant	TP7
Cables	Gen 7 Cables

Contact

UR HQ address	Teradyne Robotics A/S Energivej 51 5260 Odense, Denmark
UR HQ phone	+45 89 93 89 89
UR email	sales@universal-robots.com
UR website	universal-robots.com

UNIVERSAL ROBOTS
A Teradyne Robotics Company

UR12e-1300

Generation 7 · e-Series

Technical Data Sheet

Updated November 2026

Copyright © 2026 by Universal Robots A/S. All rights reserved.



Dimensions and reach of UR12e-1300

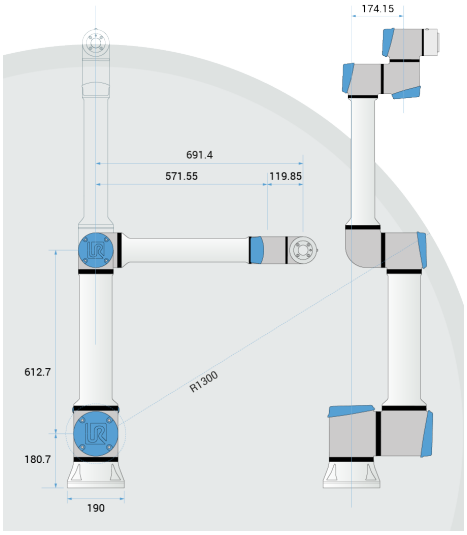

Maximum Payload

Payload [kg]

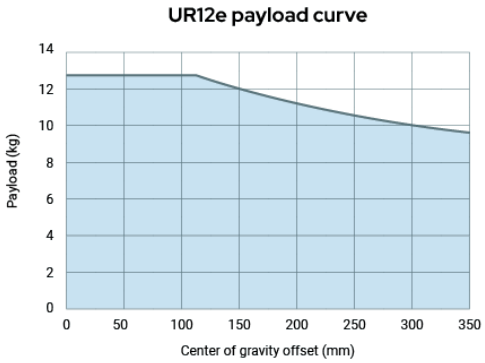

Center of gravity offset [mm]

Interface for UR12e-1300 base flange

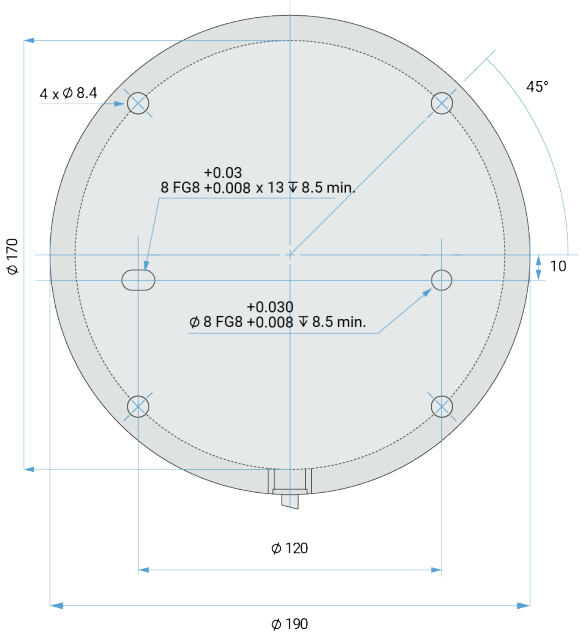

Tool flange for UR12e-1300

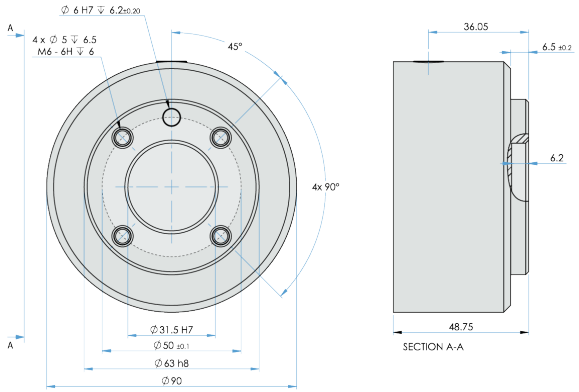

UNLESS OTHERWISE SPECIFIED: Dimensions are in millimeters. Tolerance ± 0.1 mm ± 0.5°

November 2026

Contact

UR HQ address	Teradyne Robotics A/S Energivej 51 5260 Odense, Denmark
UR HQ phone	+45 89 93 89 89
UR email	sales@universal-robots.com
UR website	universal-robots.com